01-JUNE-2000
NEW SHEET

IMPELLER CURVES

20ENH/20NKH

FLOWSERVE

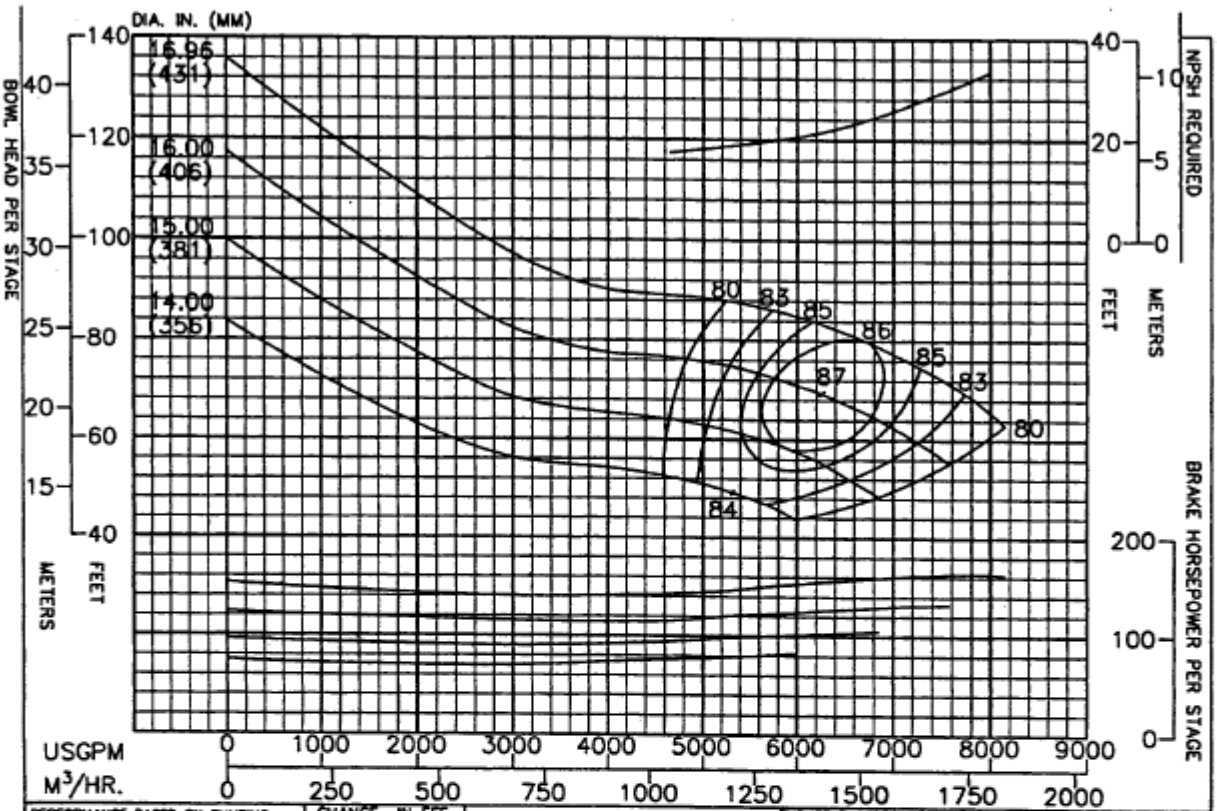

PERFORMANCE BASED ON PUMPING CLEAR WATER BELOW 85°F. WITH LISTED MAT'LS. COLUMN LOSSES NOT INCLUDED.	CHANGE IN EFF. STAGES / POINTS: 1 / 0; 2 / 0	THRUST FACTORS AT BEP: IMPELLER LBS/FT KG/M; STANDARD 29.5 44.0	RPM 1180	PUMP 20ENH
BOWL – CAST IRON – LINED			ENCLOSED IMPELLER	CURVE NO.
IMPELLER – BRONZE		EYE AREA–87.8 SQ. IN.	N_s = 3620	EC–1395

Column	Nom. Size	Max. GPM	"A" Flanged	"B" Threaded
Optional	12"	5000	16.00"	16.00"
Standard	14"	7000	17.25"	17.25"
Optional	16"	9000	19.50"	–
RATINGS				
Max. Pressure = 480 psi based on Class 30 Iron bowls				
Impeller and Shaft Weight = 141.0 pounds per stage				
Pump Shaft	Diameter = 2.44 inches			
	Max. HP. = 537 with 416 SS Pump Shaft			
Line Shaft Size	1.69	1.94	2.19	2.44
Line Shaft H.P.	192	293	383	537

Additional Data	
Max. Operating Speed.	1500
Max. No. of Stages	10
Max. Sphere Size	2.62
End Play	.78
WR 2 Per Stage	18.30
Bowl Ring Clearance	.004 - .006
Impeller Running Clearance (3)	.125

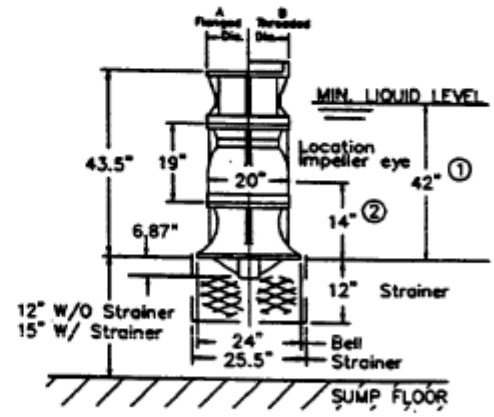

(1) Minimum submergence required to prevent vortex formation. The submergence needed to provide adequate NPSH to the first stage. Impeller may be greater or less than shown. The larger of the two values must be used to determine actual minimum allowable submergence.

(2) Location of eye of first stage impeller. Used to calculate NPSH. This is also the minimum priming submergence. (See note 1).

(3) Vertical Impeller to Bowl running clearance after shaft stretch.