16ENL/16NKL

IMPELLER CURVES

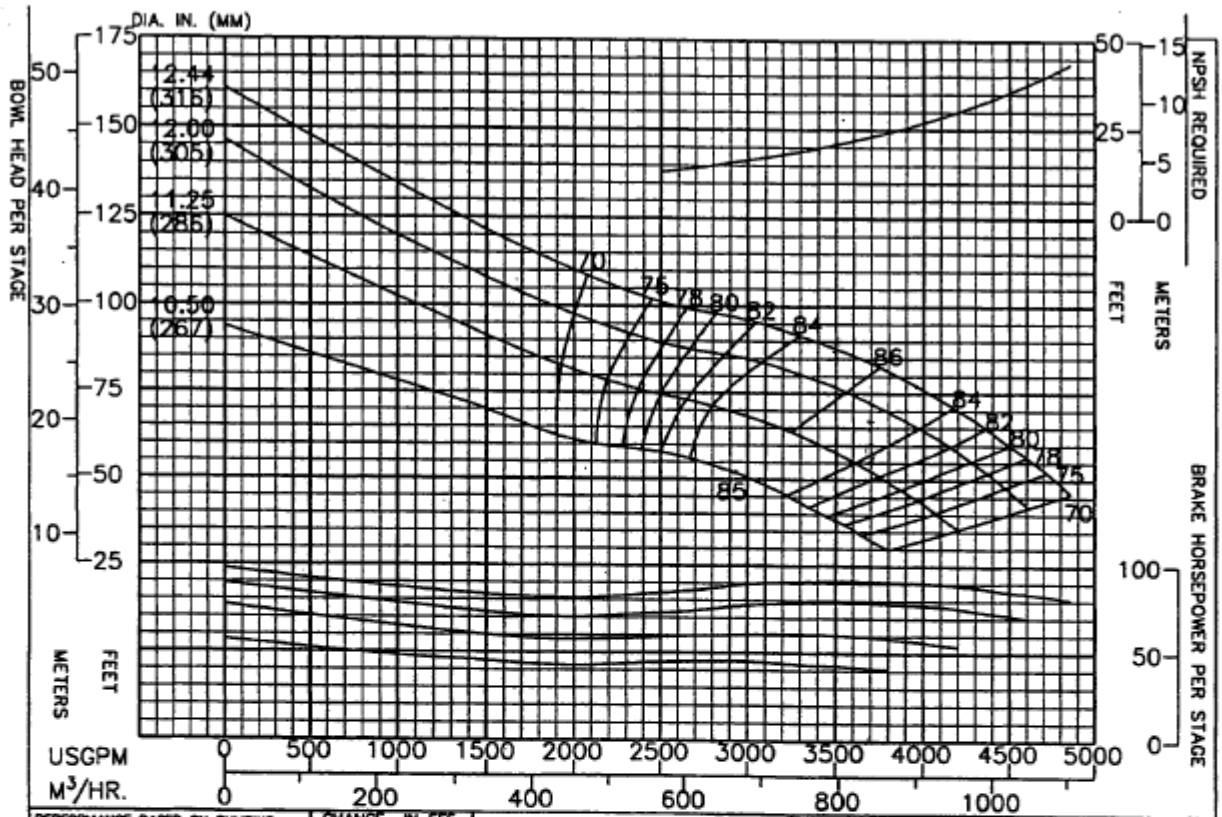

PERFORMANCE BASED ON PUMPING CLEAR WATER BELOW 85°F. WITH LISTED MAT'LS. COLUMN LOSSES NOT INCLUDED.	CHANGE STAGES	IN EFF. POINTS
BOWL – CAST IRON – LINED	1	−2
IMPELLER – BRONZE	2	−1
	3	0

THRUST FACTORS AT BEP			RPM	PUMP
IMPELLER	LBS/FT	KG/M	1775	16ENL
STANDARD	17.0	25.3	ENCLOSED IMPELLER	CURVE NO.
EYE AREA– 46.3 SQ. IN.			N_s = 3970	EC–2339

Column	Nom. Size	Max. GPM	"A" Flanged	"B" Threaded
Optional	10"	3000	13.50"	13.50"
Standard	12"	5000	16.00"	14.75"
Optional	14"	7000	–	15.00"
RATINGS				
Max. Pressure = 499 psi based on Class 30 Iron bowls				
Impeller and Shaft Weight = 61.2 pounds per stage				
Pump Shaft	Diameter = 2.19 inches			
	Max. HP. = 575 with 416 SS Pump Shaft			
Line Shaft Size	1.50	1.69	1.94	2.19
Line Shaft H.P.	200	288	440	575

Additional Data	
Max. Operating Speed.	2100
Max. No. of Stages	13
Max. Sphere Size	1.93
End Play	.94
WR 2 Per Stage	4.77
Bowl Ring Clearance	.003 - .005
Impeller Running Clearance (3)	.125"

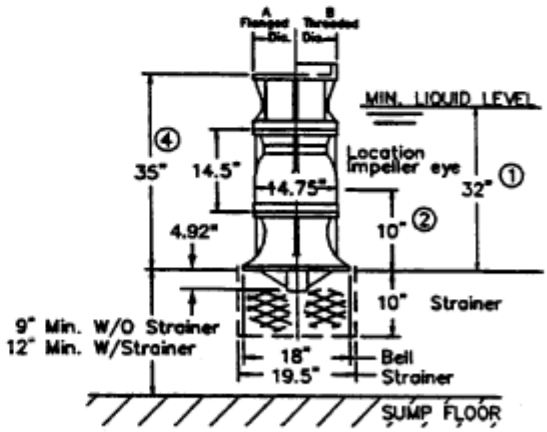

(1) Minimum submergence required to prevent vortex formation. The submergence needed to provide adequate NPSH to the first stage. Impeller may be greater or less than shown. The larger of the two values must be used to determine actual minimum allowable submergence.

(2) Location of eye of first stage impeller. Used to calculate NPSH. This is also the minimum priming submergence. (See note 1).

(3) Vertical Impeller to Bowl running clearance after shaft stretch.

(4) For Suction Case dimensions see sheets 20.26 and 20.29.