FLOWSERVE

18ENL/18NKL

01-JUNE-2000
NEW SHEET

IMPELLER CURVES

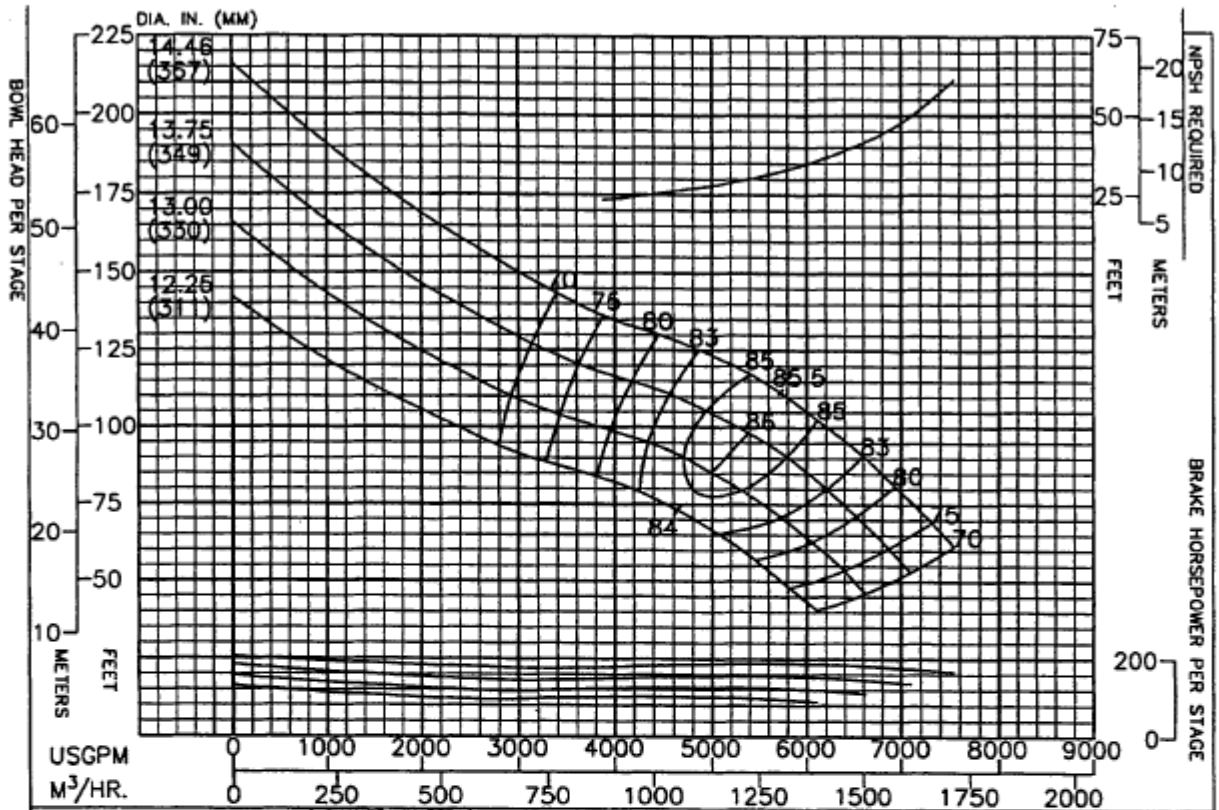

PERFORMANCE BASED ON PUMPING CLEAR WATER BELOW 85°F. WITH LISTED MATLS. COLUMN LOSSES NOT INCLUDED.	CHANGE STAGES	IN EFF. POINTS
	1	-1
	2	0
BOWL – CAST IRON – LINED		
IMPELLER – BRONZE		

THRUST FACTORS AT BEP		
IMPELLER	LBS/FT	KG/M
STANDARD	23.2	34.6
EYE AREA–62.4 SQ. IN.		

RPM	PUMP
1780	18ENL
ENCLOSED IMPELLER	CURVE NO.
N_s = 3930	EC–1455

Column	Nom. Size	Max. GPM	"A" Flanged	"B" Threaded
Optional	10"	3000	13.50"	13.50"
Standard	12"	5000	16.00"	16.00"
Optional	14"	7000	17.25"	16.00"
RATINGS				
Max. Pressure = 522 psi based on Class 30 Iron bowls				
Impeller and Shaft Weight = 96.0 pounds per stage				
Pump Shaft	Diameter = 2.19 inches			
	Max. HP. = 575 with 416 SS Pump Shaft			
Line Shaft Size	1.50	1.69	1.94	2.19
Line Shaft H.P.	200	288	440	575

Additional Data	
Max. Operating Speed.	1800
Max. No. of Stages	11
Max. Sphere Size	2.22
End Play	.72
WR 2 Per Stage	7.83
Bowl Ring Clearance	.004 - .006
Impeller Running Clearance (3)	.125

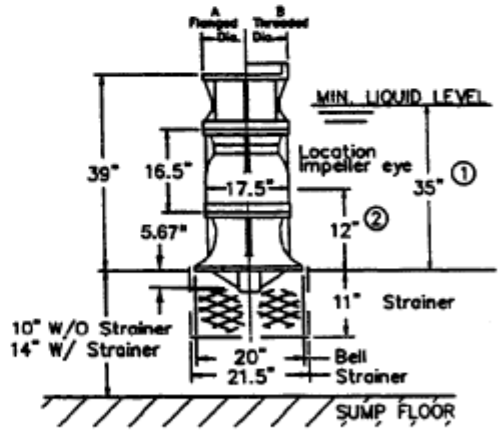

(1) Minimum submergence required to prevent vortex formation. The submergence needed to provide adequate NPSH to the first stage. Impeller may be greater or less than shown. The larger of the two values must be used to determine actual minimum allowable submergence.

(2) Location of eye of first stage impeller. Used to calculate NPSH. This is also the minimum priming submergence. (See note 1).

(3) Vertical Impeller to Bowl running clearance after shaft stretch.

All Specifications Subject to Change Without Notice.