6M9

IMPELLER CURVES

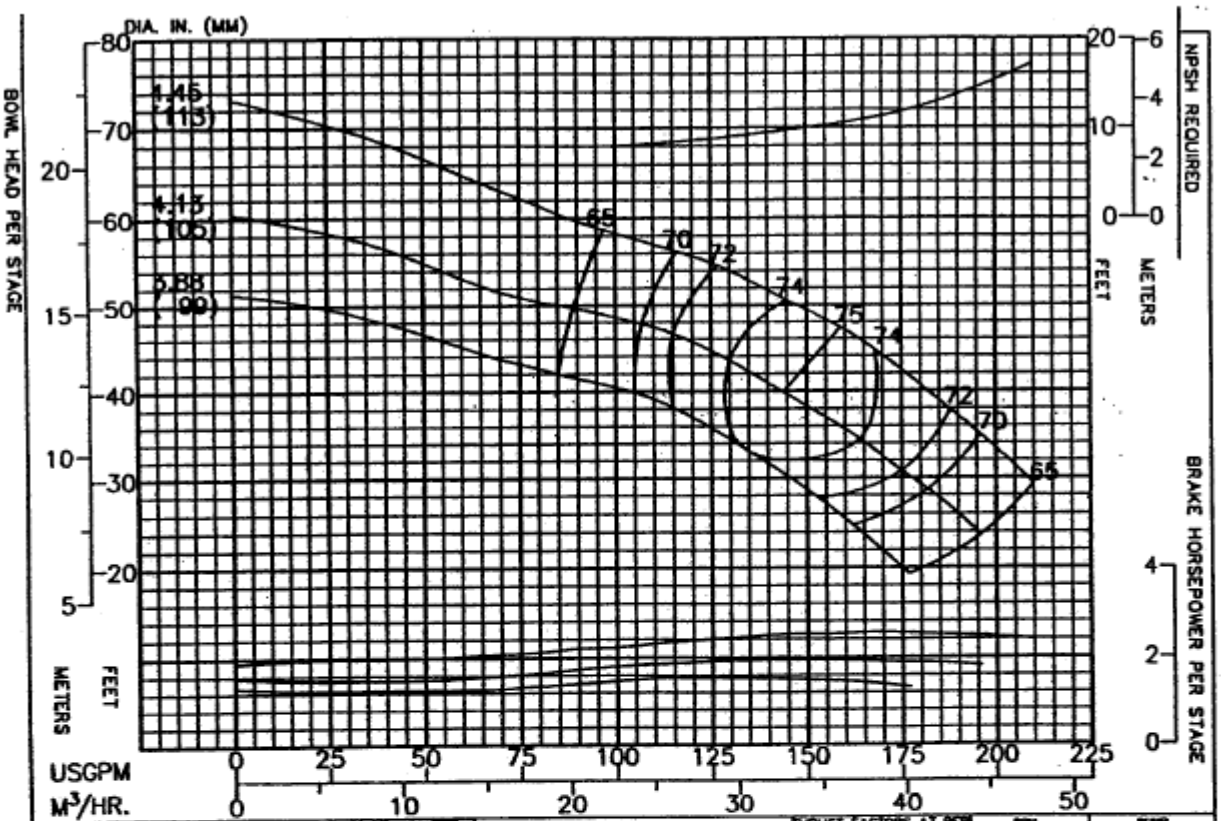

PERFORMANCE BASED ON PUMPING CLEAR WATER BELOW 85°F. WITH LISTED MAT'LS. COLUMN LOSSES NOT INCLUDED.	CHANGE IN STAGES	IN FT. POINTS	THRUST FACTORS AT BEP		RPM 3500	PUMP 6M9
BOWL – CAST IRON	1	-4	IMPELLER LBS/FT	KG/M		
IMPELLER – BRONZE	2	-2.5	STANDARD 1.6	2.4	ENCLOSED IMPELLER	CURVE NO. EC-2437
	3	-1	EYE AREA – 4.12 SQ. IN.		N_s = 2450	

Column	Nom. Size	Max. GPM	"A" Flanged	"B" Threaded
Optional				
Standard	4"	200	7.50"	5.63"
Optional				

RATINGS	
Max. Pressure = 640 psi based on Class 30 Iron bowls	
Impeller and Shaft Weight = 4.0 pounds per stage	
Pump Shaft	Diameter = 1.00 inches
	Max. HP. = 114 with 416 SS Pump Shaft
Line Shaft Size	1.00
Line Shaft H.P.	114

Additional Data	
Max. Operating Speed.	3600
Max. No. of Stages	20
Max. Sphere Size	.16
End Play	.37
WR 2 Per Stage	.046
Bowl Ring Clearance	.003 - .005
Impeller Running Clearance (3)	0.125

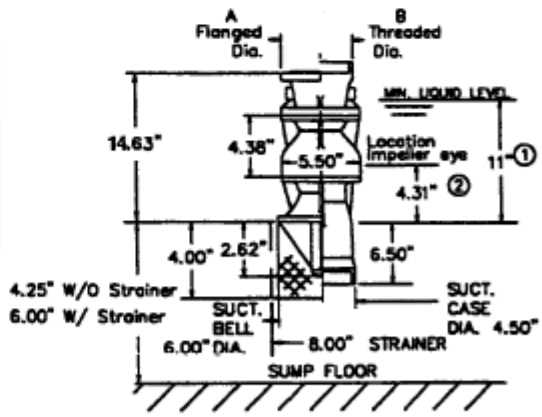

(1) Minimum submergence required to prevent vortex formation. The submergence needed to provide adequate NPSH to the first stage. Impeller may be greater or less than shown. The larger of the two values must be used to determine actual minimum allowable submergence.

(2) Location of eye of first stage impeller. Used to calculate NPSH. This is also the minimum priming submergence. (See note 1).

(3) Vertical Impeller to Bowl running clearance after shaft stretch.