WINTROATH PUMPS – *DIVISION OF WORTHINGTON CORPORATION*

12 M – 90

1160 R.P.M.

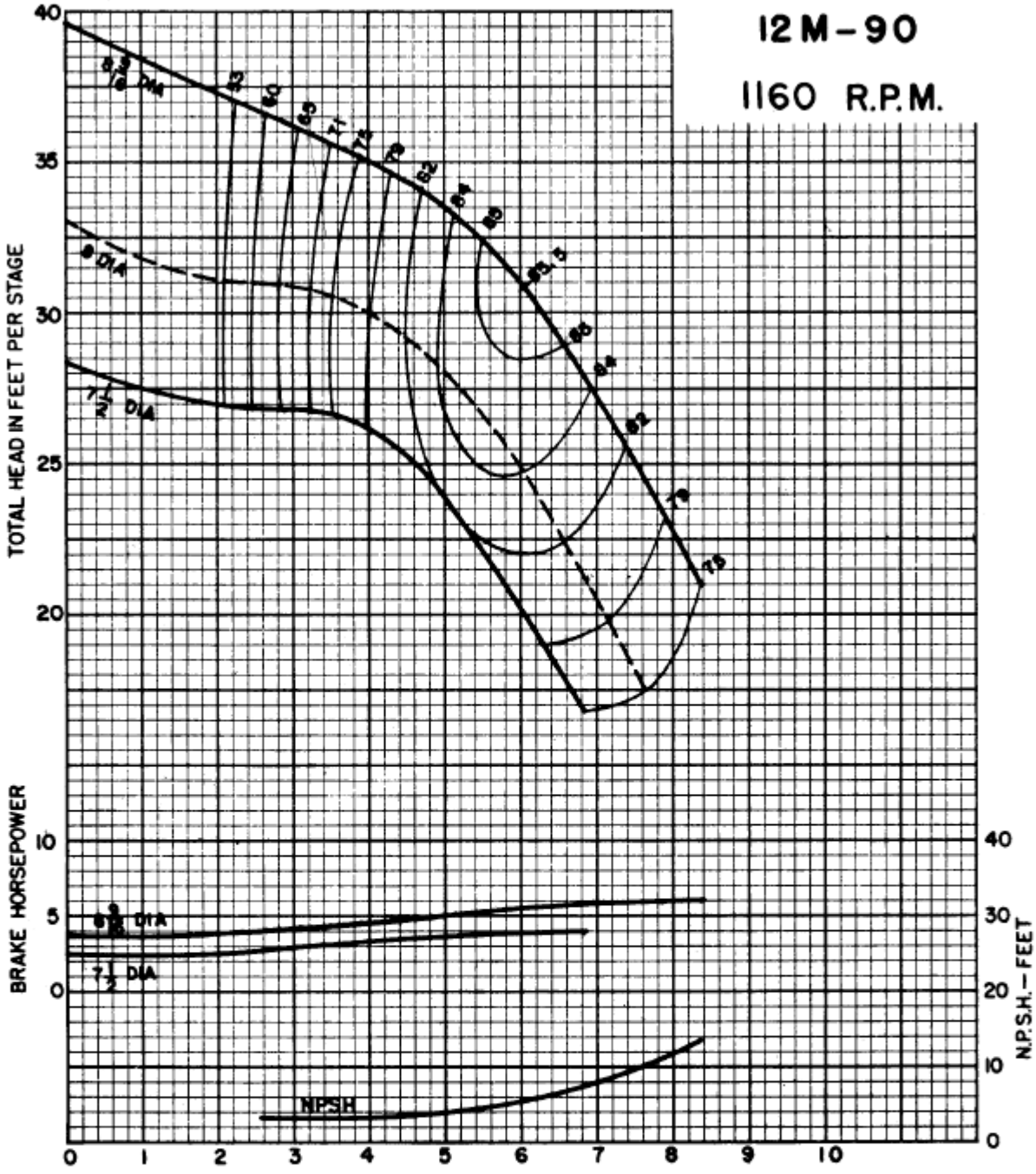

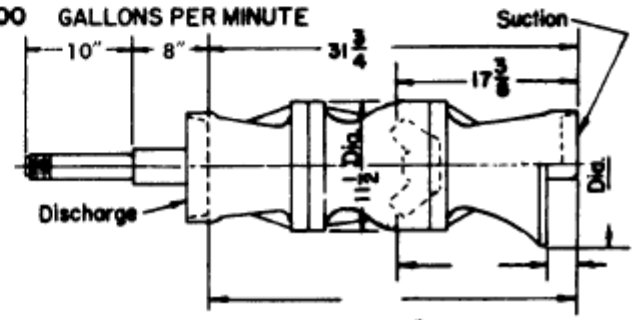

For additional stages add 10" per stage.

Efficiency shown is for 4 stages or more, with standard materials. For fewer stages or other materials change efficiency as shown.

No. of stages	Eff. change	MATERIAL	Eff. change
6	—	Impeller – bronze	
5	—	Impeller – c.i.	
4	—	Impeller – c.i. enm.	
3	-2.5	Bowl – c.i. enm.	
2	-3.5	Bowl – cast iron	
1	-6	Bowl – bronze	

Standard materials	
Impeller – bronze	
Bowl – cast iron / enamelled	
Thrust factor	7.9
Rotor wt. per stage (lbs.)	26
Bowl wt. 1st stage (lbs.)	252
Bowl wt. add'l. stage (lbs.)	93
Max. bowl horsepower	160
Impeller eye area (sq. in.)	16.7

Column pipe	6	8
Suction pipe	8	
Impeller shaft diameter	1.75	

ALH – 8005