RATING CURVES
(60 CYCLE)

10HH-110
1160 RPM

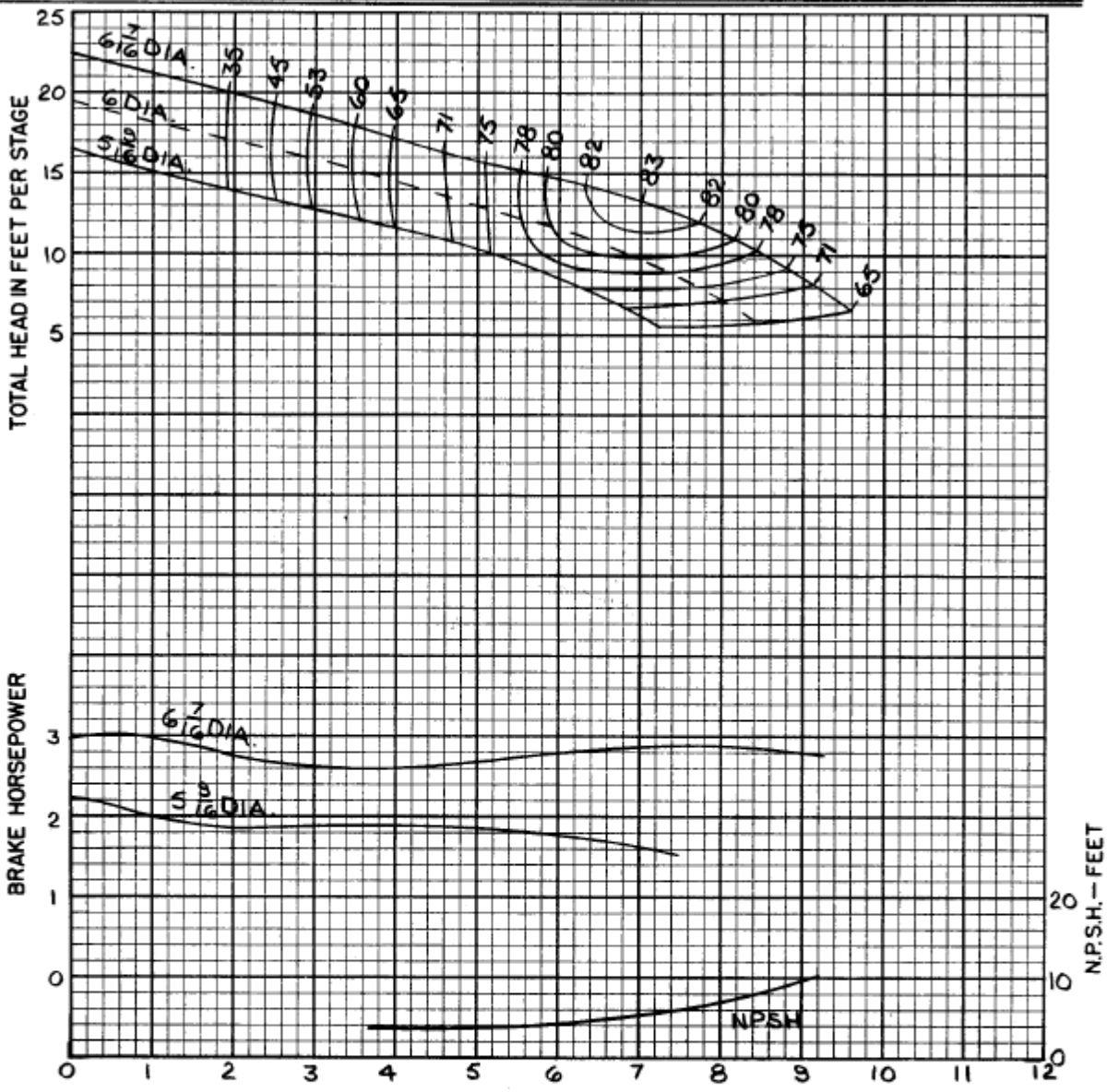

Efficiency shown is for 4 stages or more, with standard materials. For fewer stages or other materials change efficiency as shown.

No. of stages	Eff. change	MATERIAL	Eff. change
6	—	Impeller–bronze	—
5	—	Impeller–c.i.	-1
4	—	Impeller–c.i. enm.	+1.5
3	-.5	Bowl–c.i. enm.	—
2	-1.5	Bowl–cast iron	-2.5
1	-5	Bowl–bronze	-2

Standard materials	
Impeller – bronze	
Bowl – cast iron / enamelled	
Thrust factor	9.9
Rotor wt. per stage (lbs.)	16.7
Bowl wt. 1st stage (lbs.)	177
Bowl wt. add'l. stage (lbs.)	62
Max. bowl horsepower	90
Impeller eye area (sq. in.)	22.5

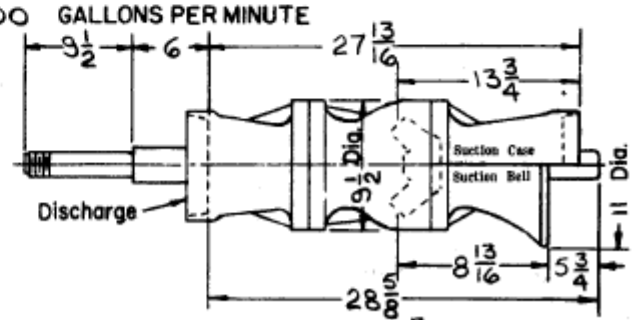

For additional stages add 9 3/4 per stage.

Impeller shaft diameter	1.5	Column pipe	8
Minimum impeller shaft end play	.5	Suction pipe	8