Customer _____ Worthington S.O. _____
Project _____ Proposal/Order No. _____
Cust. Proposal/Order No. _____ Certified By _____
Customer Item No. _____ Date _____

Liquid/Service _____ Sp. Gr. _____ Visc. _____ SSU
Capacity _____ Head _____ Temp. _____ °F /°C Consistency _____ %

WORTHINGTON PUMP PERFORMANCE DATA

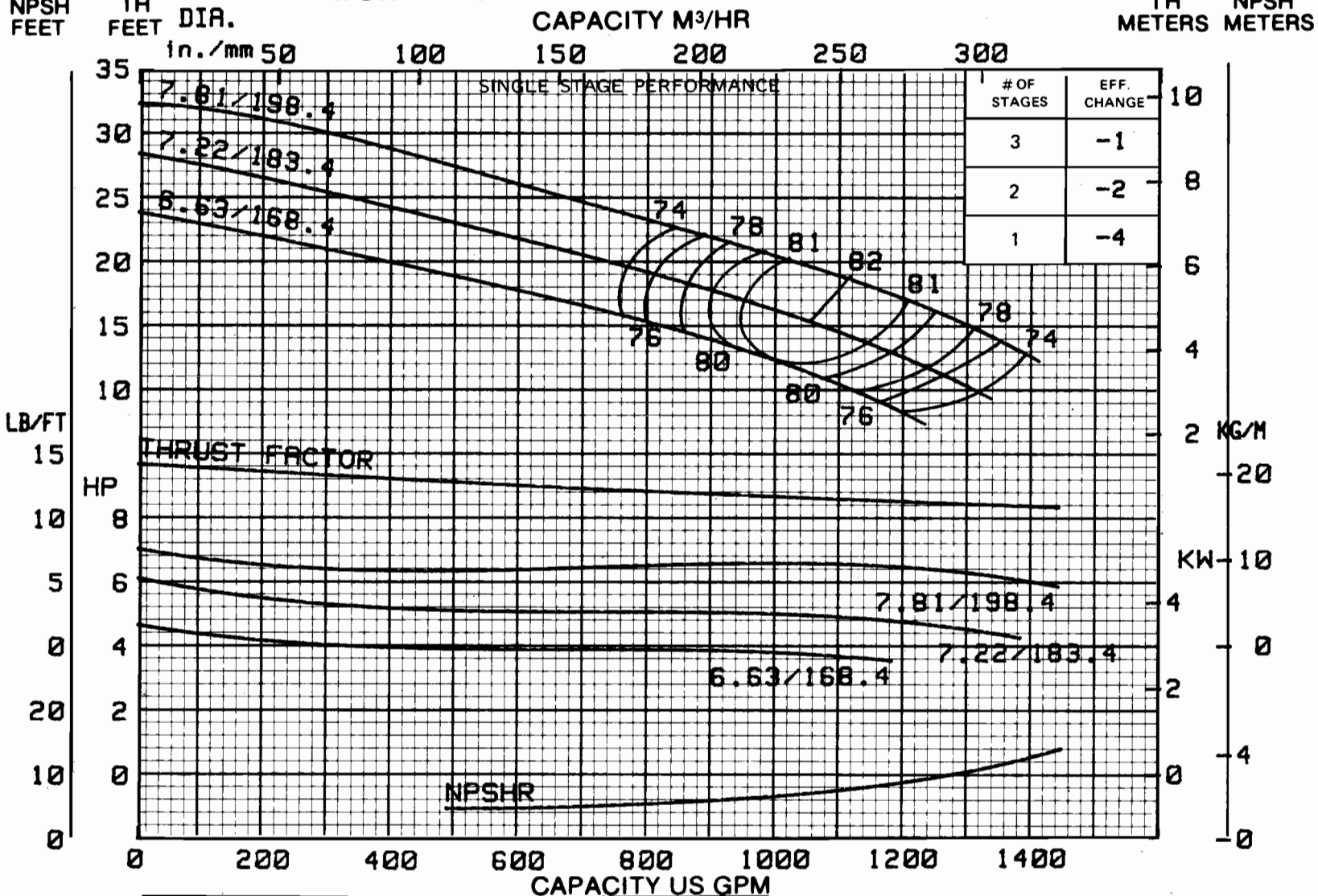

# OF STAGES	EFF. CHANGE
3	-1
2	-2
1	-4

CURVE NO.	SIZE	RPM
A-24145K	12HH165	1160

Dresser Pump Division, Dresser Industries, Inc.

RATING CURVES
(60 CYCLE)

12HH-165
1160 RPM

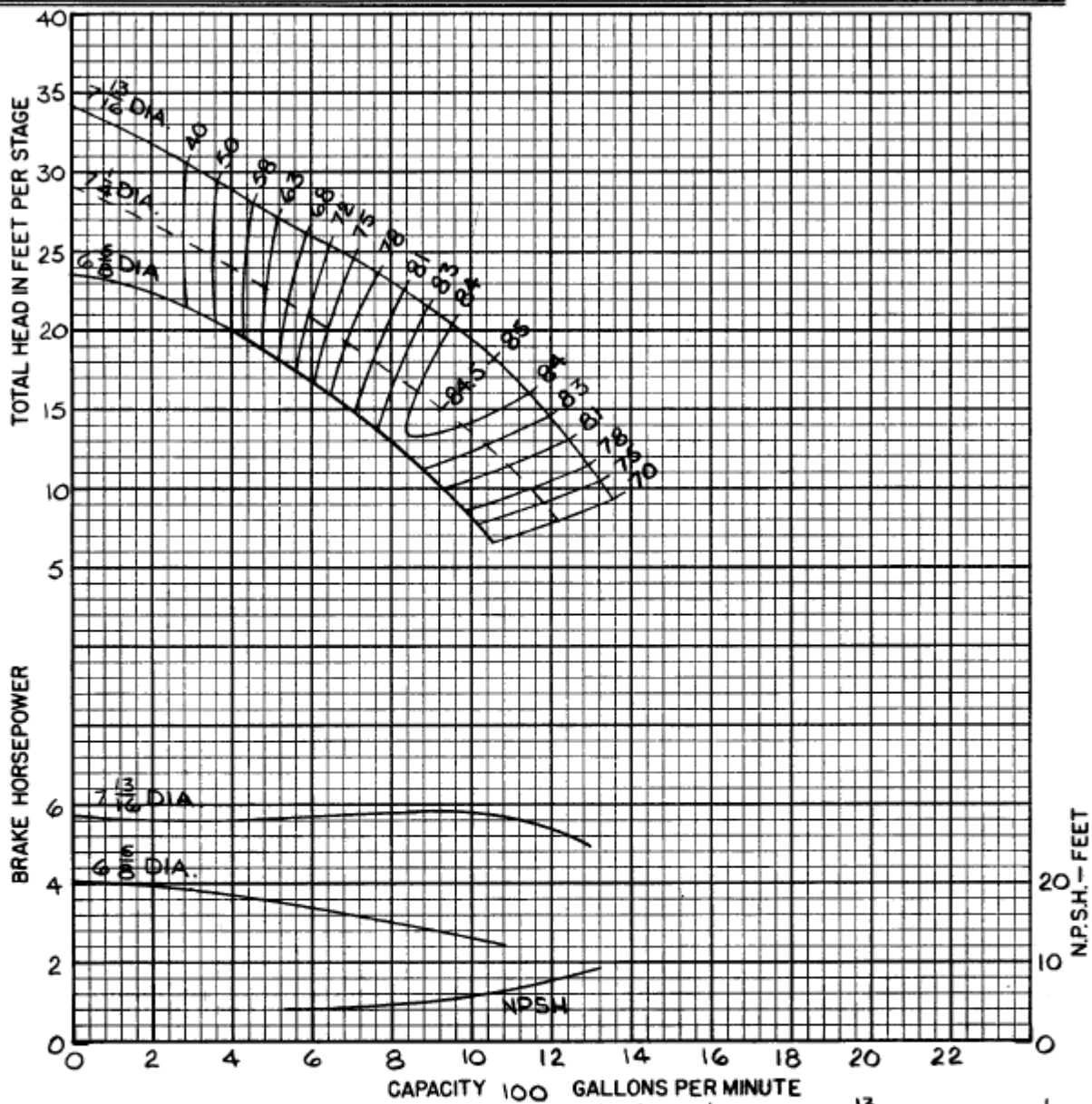

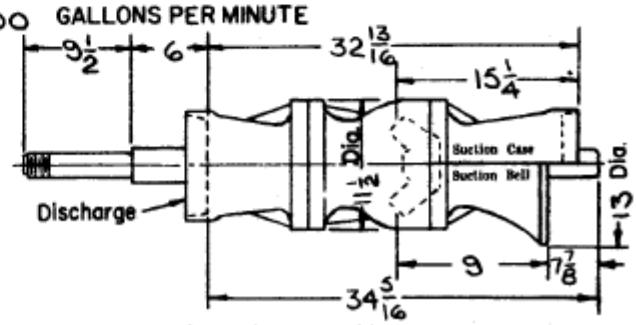

For additional stages add 12 per stage.

Efficiency shown is for 2 stages or more, with standard materials. For fewer stages or other materials change efficiency as shown.

No. of stages	Eff. change	MATERIAL	Eff. change
6	—	Impeller-bronze	—
5	—	Impeller-c.i.	-1
4	—	Impeller-c.i. enm.	+1.5
3	—	Bowl-c.i. enm.	—
2	—	Bowl-cast iron	-2
1	-2.5	Bowl-bronze	-1.5

Standard materials	
Impeller — bronze	
Bowl — cast iron / enamelled	
Thrust factor	14.5
Rotor wt. per stage (lbs.)	27
Bowl wt. 1st stage (lbs.)	275
Bowl wt. add'l. stage (lbs.)	101
Max. bowl horsepower	160
Impeller eye area (sq. in.)	33.4

Impeller shaft diameter	1.75	Column pipe	10	8
Minimum impeller shaft end play	.813	Suction pipe	10	