Customer _____ Worthington S.O. _____
Project _____ Proposal/Order No. _____
Cust. Proposal/Order No. _____ Certified By _____
Customer Item No. _____ Date _____

Liquid/Service _____ Sp. Gr. _____ Visc. _____ SSU
Capacity _____ Head _____ Temp. _____ °F/°C

WORTHINGTON PUMP PERFORMANCE DATA

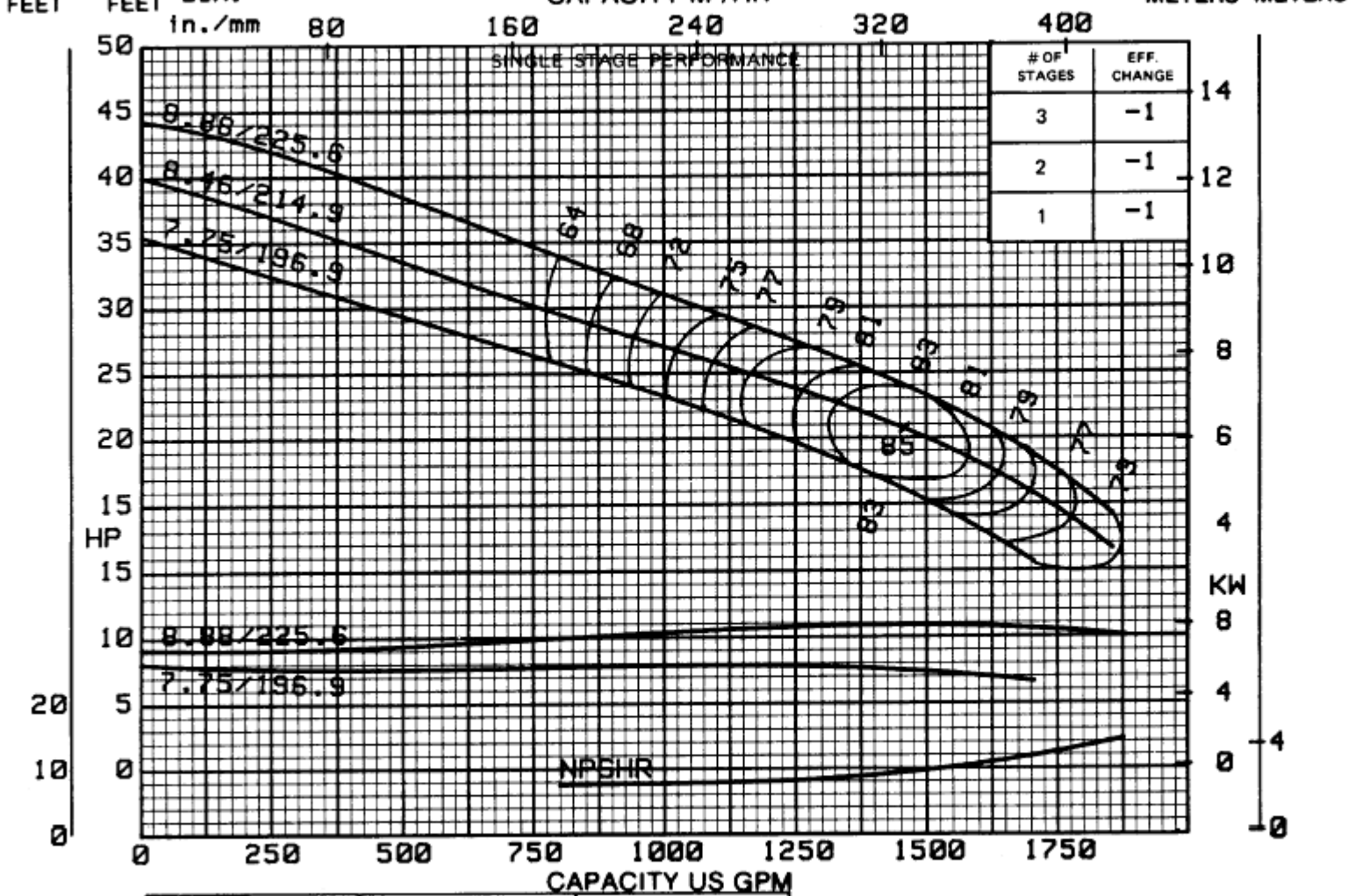

# OF STAGES	EFF. CHANGE
3	−1
2	−1
1	−1

CURVE NO.	SIZE	RPM
A-24153	14HH220	1160

RATING CURVES
(60 CYCLE)

14HH-220
1160 RPM

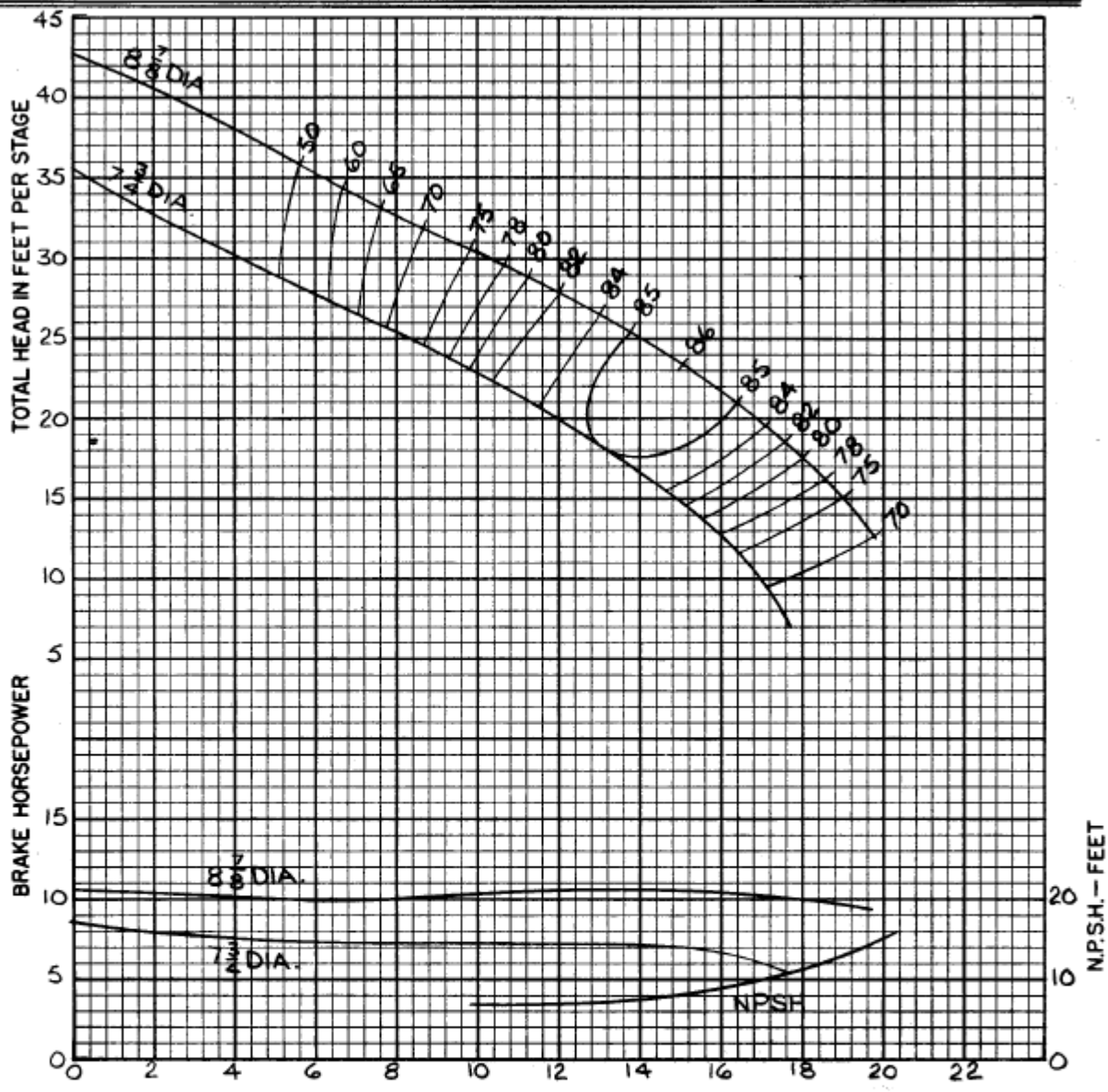

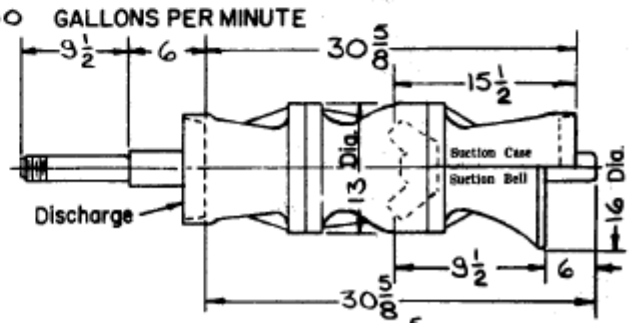

For additional stages add 13 5/16 per stage.

Efficiency shown is for 2 stages or more, with standard materials. For fewer stages or other materials change efficiency as shown.

No. of stages	Eff. change	MATERIAL	Eff. change
6	—	Impeller-bronze	—
5	—	Impeller-c.i.	-1
4	—	Impeller-c.i. enm.	+1
3	—	Bowl-c.i. enm.	—
2	—	Bowl-cast iron	-2
1	-2	Bowl-bronze	-1.5

Standard materials	
Impeller — bronze	
Bowl — cast iron / enamelled	
Thrust factor	21
Rotor wt. per stage (lbs.)	35
Bowl wt. 1st stage (lbs.)	305
Bowl wt. add'l. stage (lbs.)	135
Max. bowl horsepower	95
Impeller eye area (sq. in.)	45

Impeller shaft diameter	1.5	Column pipe	10	12
Minimum impeller shaft end play	.75	Suction pipe	12	