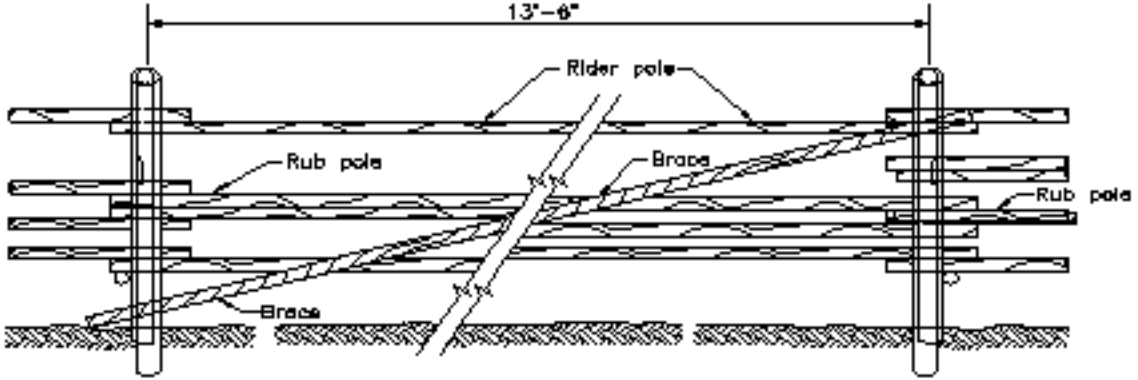

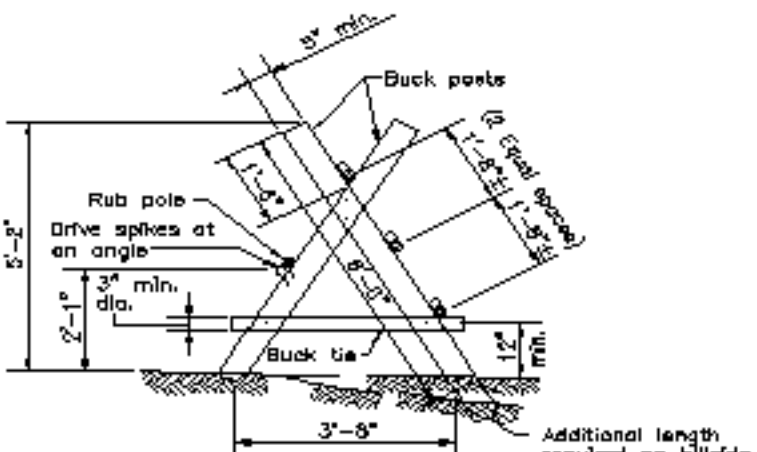

BUCK & 3-POLE FENCE

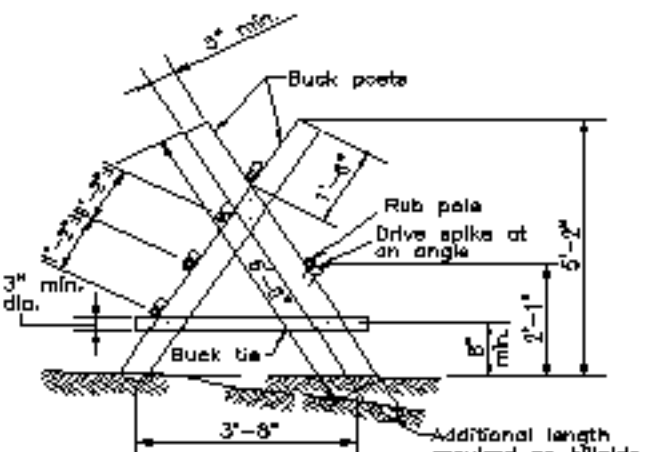

BUCK & 4-POLE FENCE