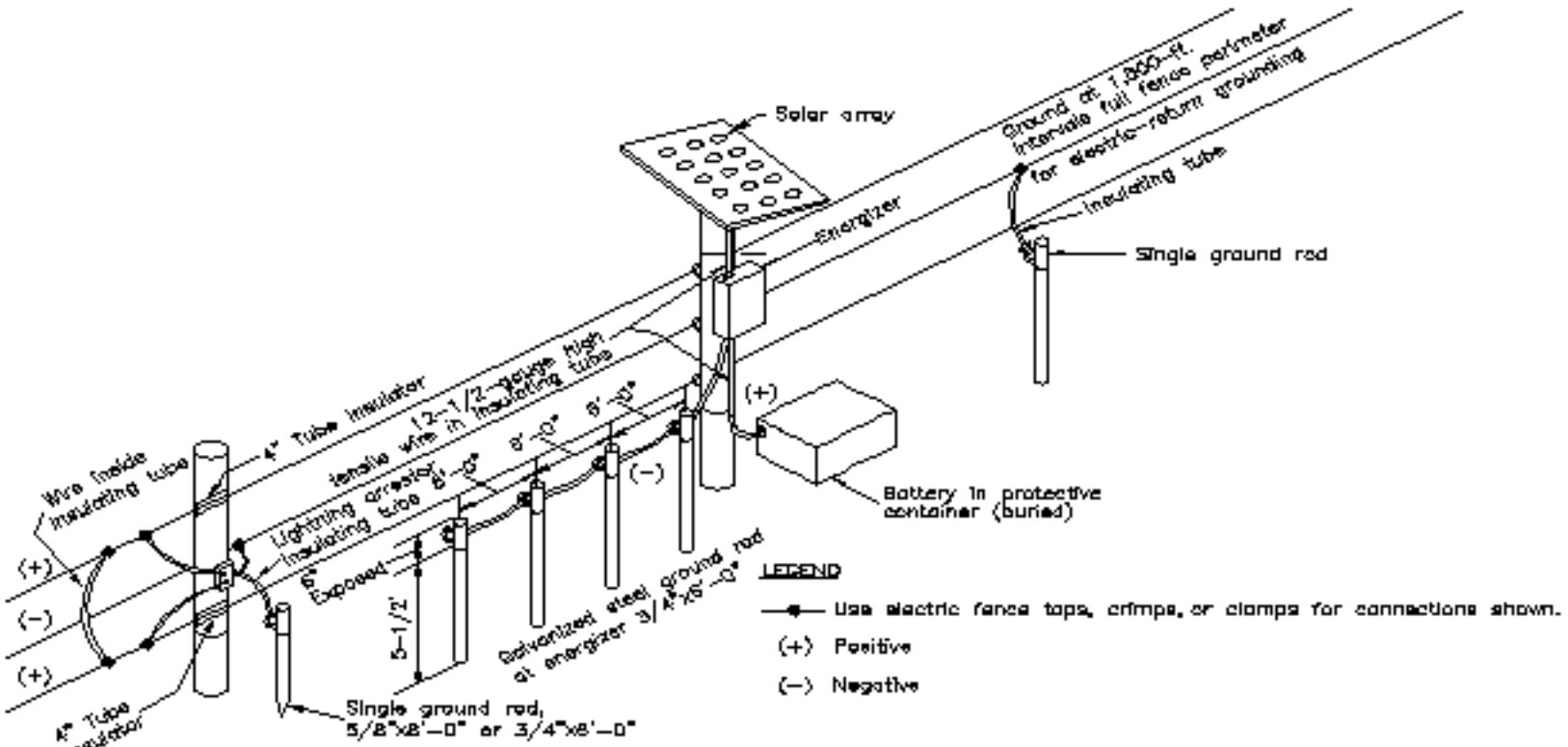

ISOMETRIC OF ENERGIZER ASSEMBLY