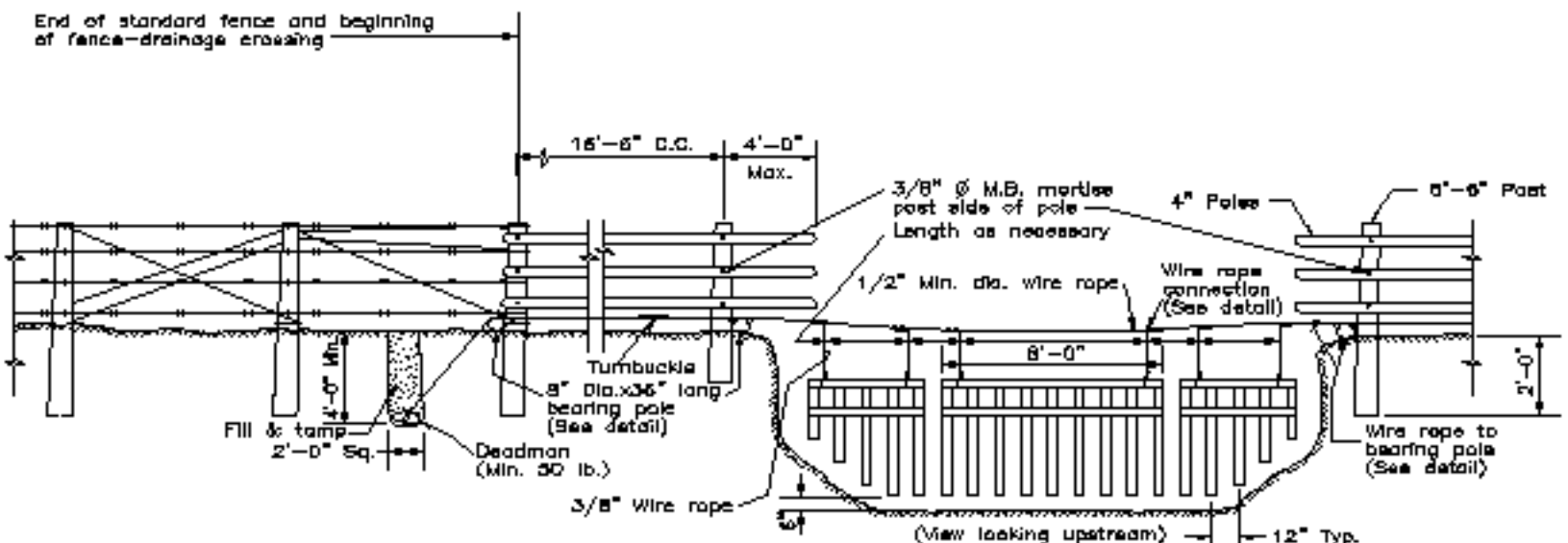

FENCE—DRAINAGE CROSSING