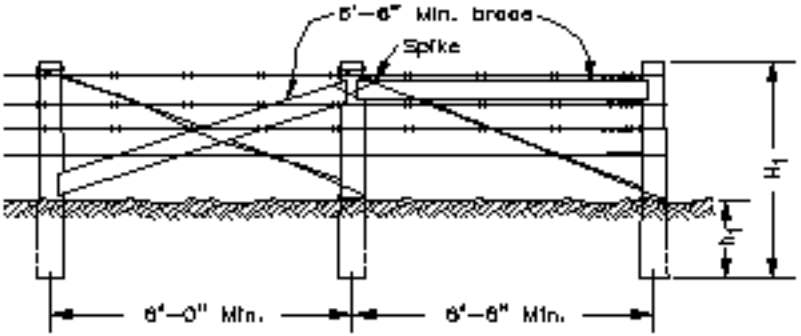

END PANEL—TYPE I

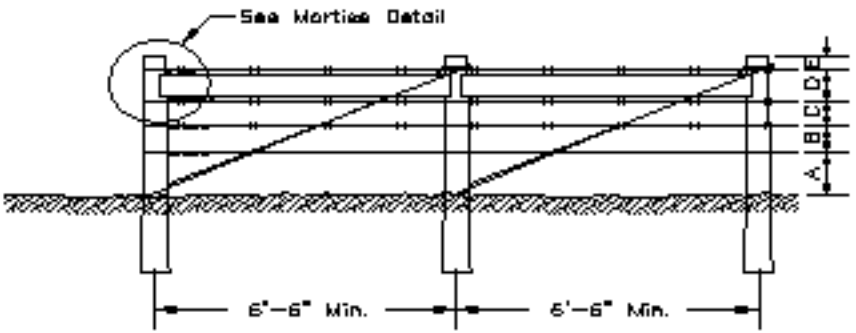

END PANEL—TYPE II

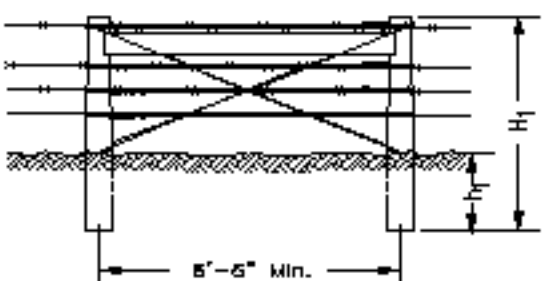

STRESS PANEL

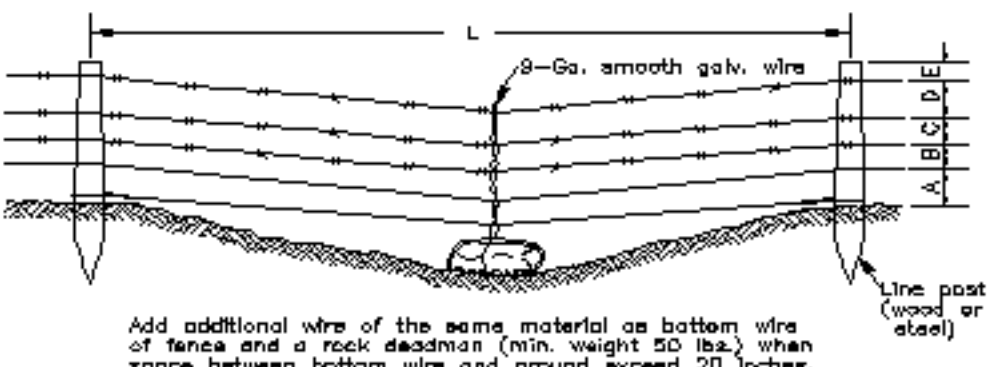

PANEL AT MINOR DEPRESSION