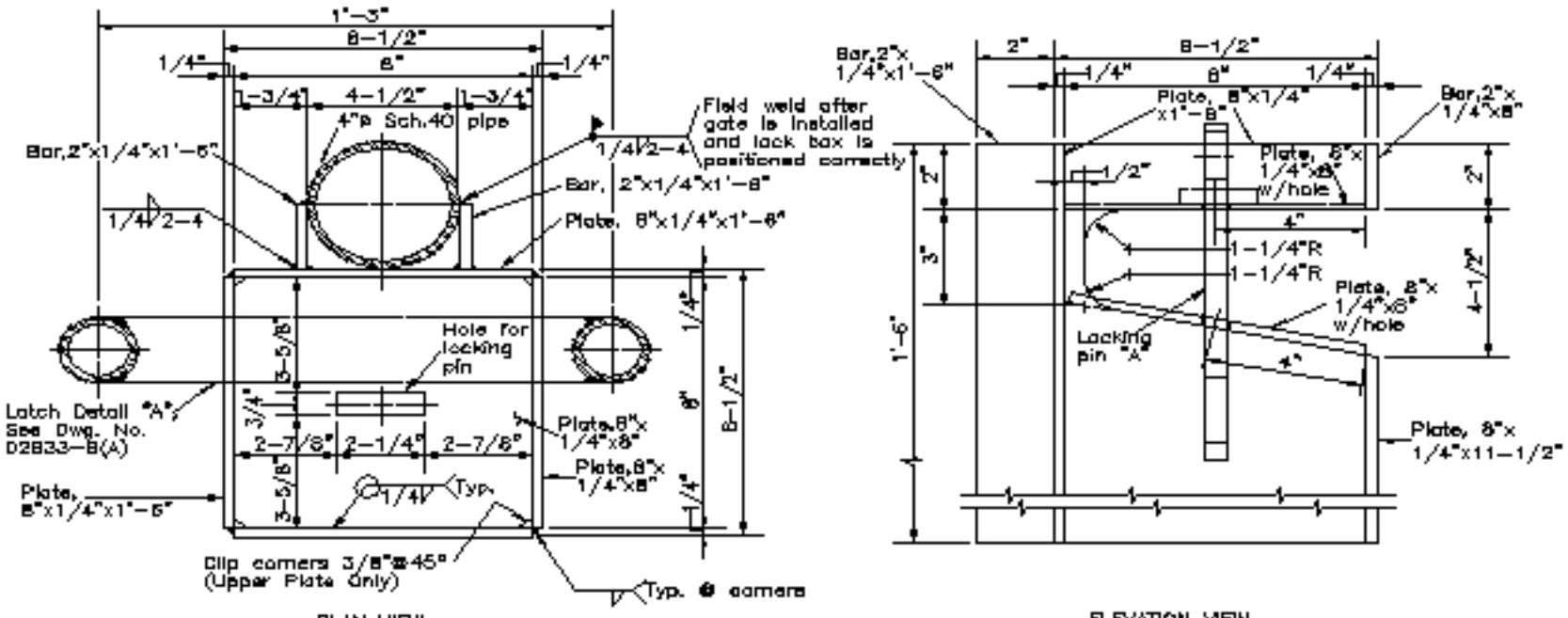

LOCK BOX DETAIL

LOCKBOX & LOCKING PINS