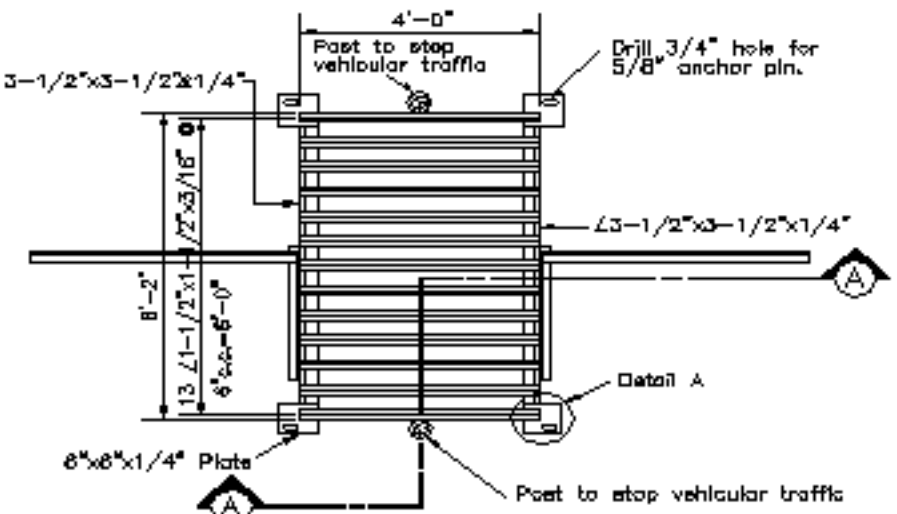

PLAN

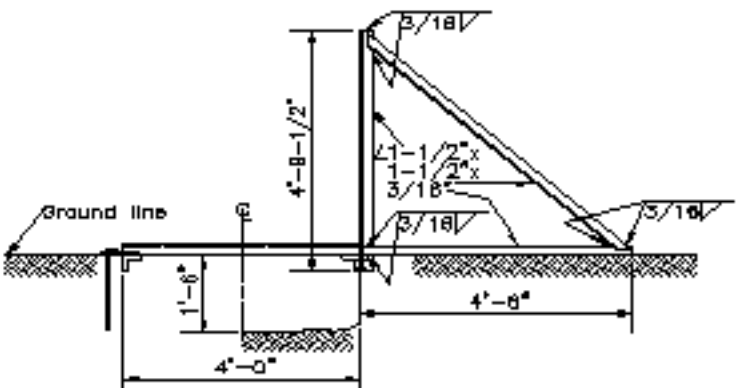

SECTION A-A

ANTELOPE PASS STRUCTURE