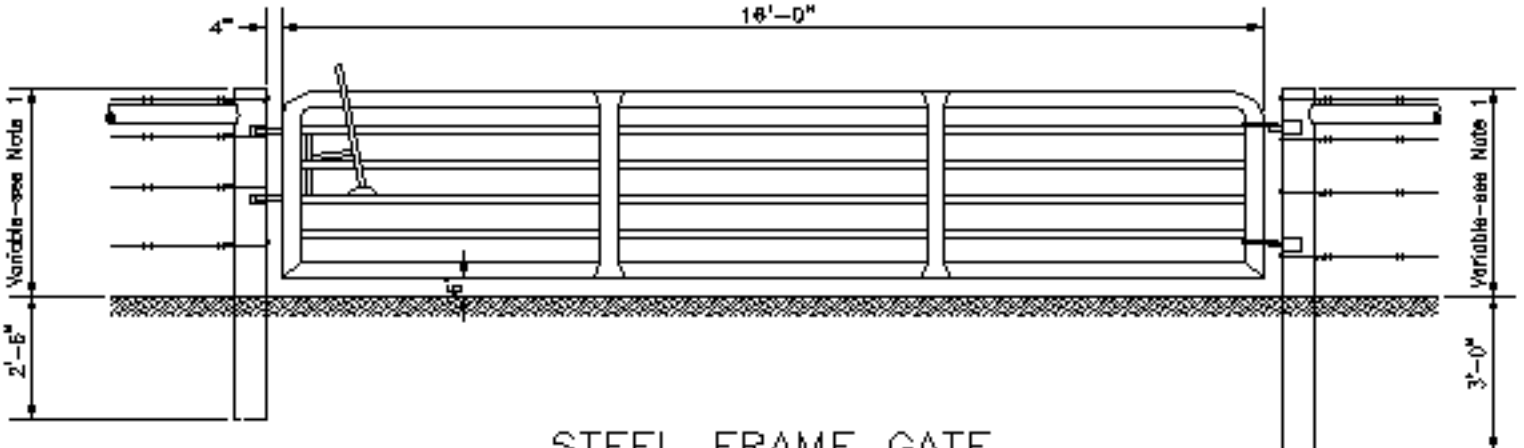


STEEL FRAME GATE

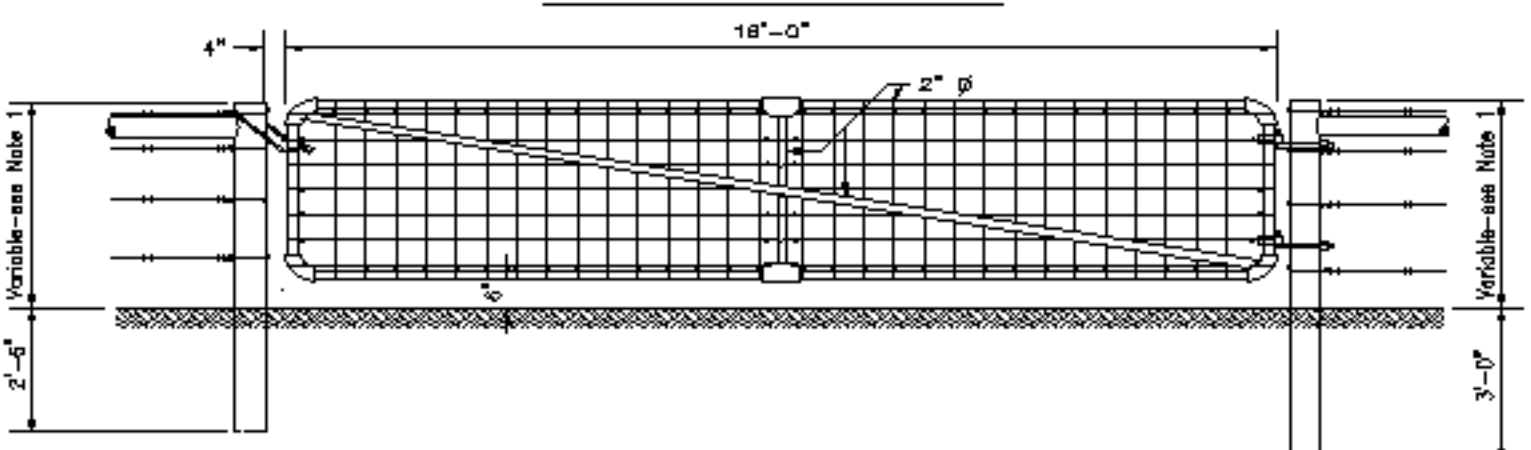


PIPE FRAME GATE