DETAIL 10A - STONE /RIP-RAP OUTLET SEDIMENT TRAP - ST IV

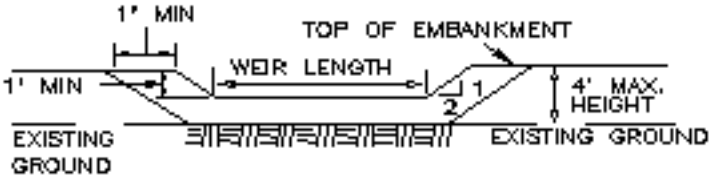

SECTION B-B

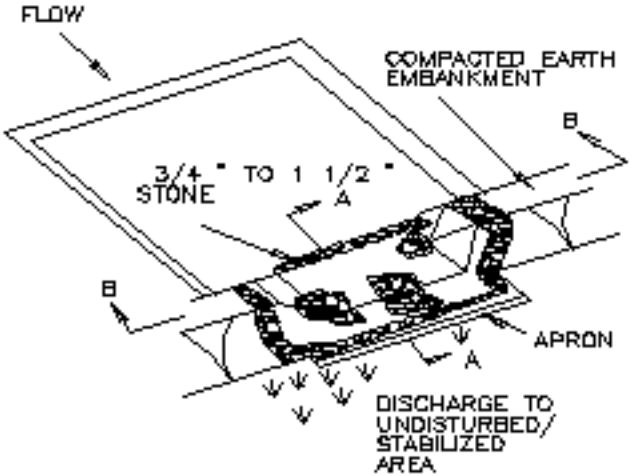

PERSPECTIVE VIEW

2:1 MAX.