DETAIL 23A - STANDARD INLET PROTECTION

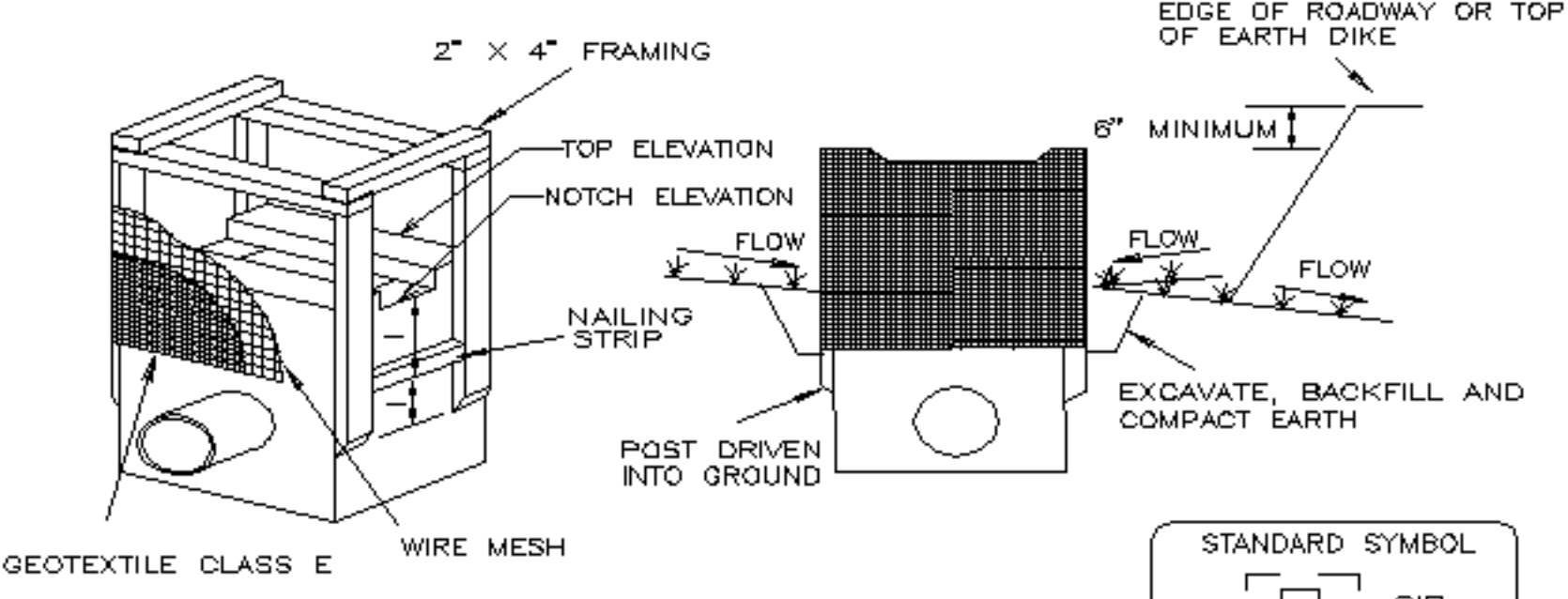

MAX. DRAINAGE AREA = 1/4 ACRE

STANDARD SYMBOL

SIP