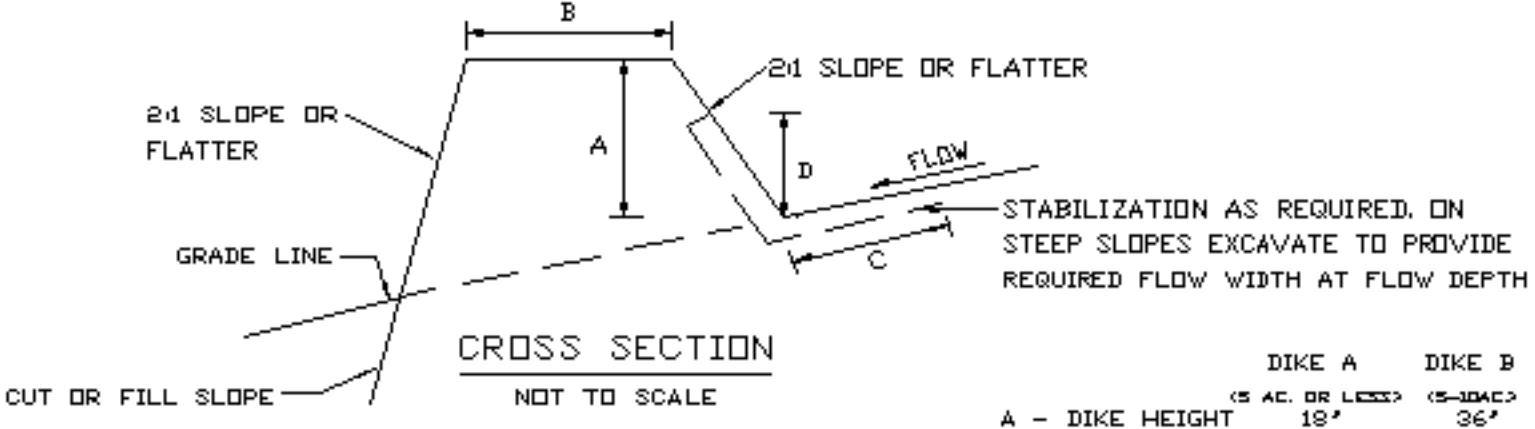
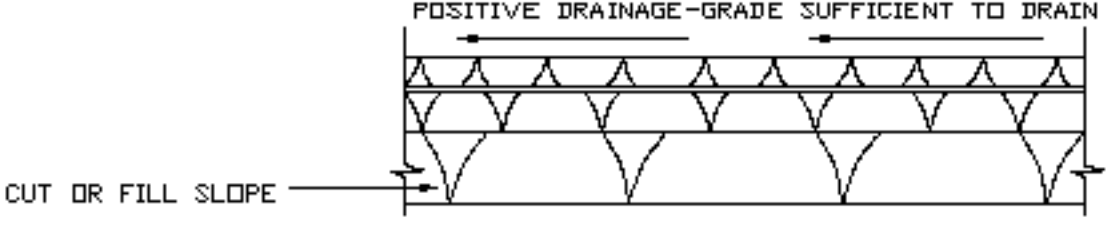
	DIKE A (5 AC. OR LESS)	DIKE B (5-10AC)
A - DIKE HEIGHT	18'	36'
B - DIKE WIDTH	24'	36'
C - FLOW WIDTH	4'	6'
D - FLOW DEPTH	8'	15'