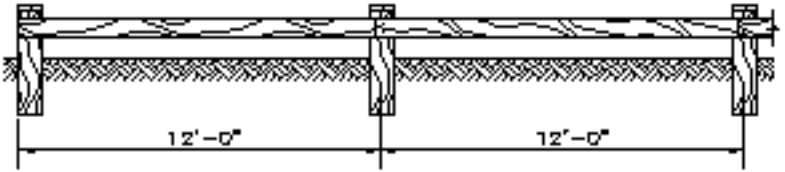

ELEVATION VIEW

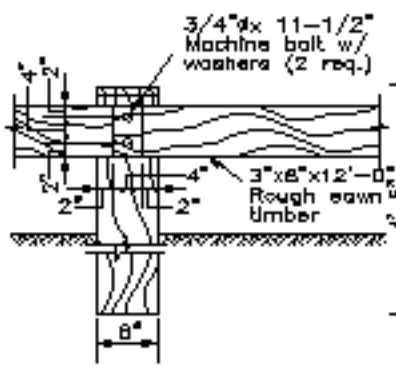

FRONT VIEW

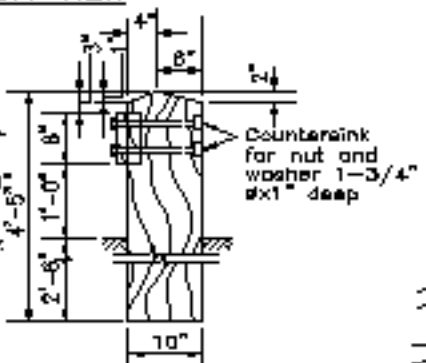

SIDE VIEW

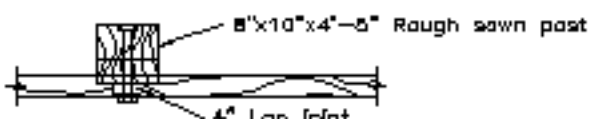

PLAN VIEW

TYPE 1

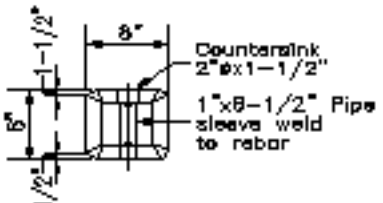

PLAN VIEW

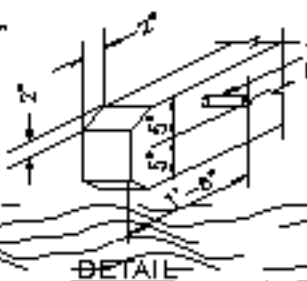

DETAIL

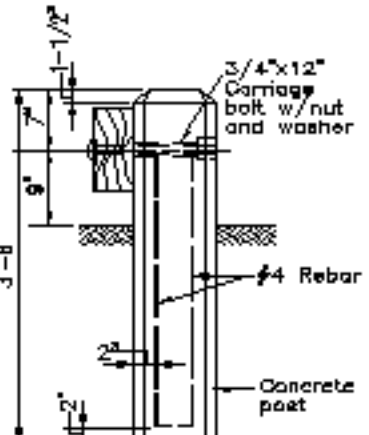

SIDE VIEW

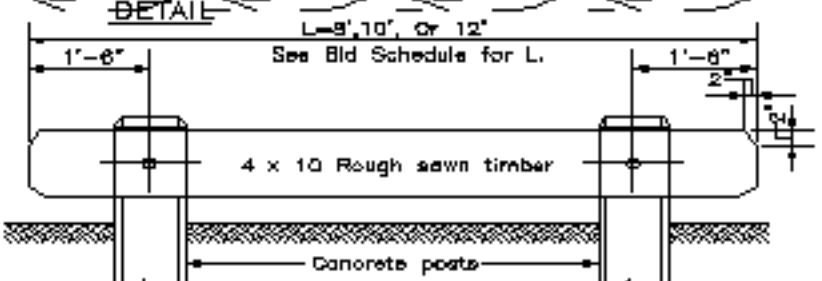

ELEVATION VIEW

TIMBER BARRIERS