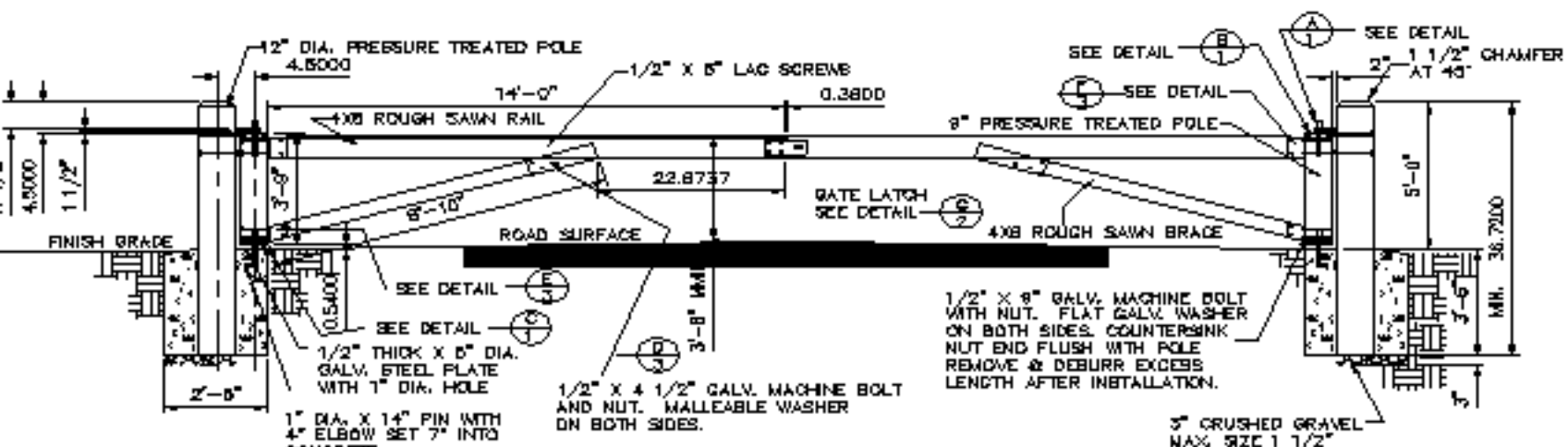
12" DIA. PRESSURE TREATED POLE
4.5000
1/2" X 5" LAG SCREWS
14'-0"
0.3800
4X8 ROUGH SAWN RAIL
22.8737
8'-10"
3'-9"
4.5000
1 1/2"
FINISH GRADE
ROAD SURFACE
SEE DETAIL
SEE DETAIL
0.5400
1/2" THICK X 5" DIA. GALV. STEEL PLATE WITH 1" DIA. HOLE
2'-5"
1" DIA. X 14" PIN WITH 4" ELBOW SET 7" INTO CONCRETE.
1/2" X 4 1/2" GALV. MACHINE BOLT AND NUT. MALLEABLE WASHER ON BOTH SIDES.
3'-8" MIN.
GATE LATCH SEE DETAIL
4X8 ROUGH SAWN BRACE
9" PRESSURE TREATED POLE
SEE DETAIL
SEE DETAIL
SEE DETAIL
2"
1 1/2" CHAMFER AT 45°
5'-0"
36.7200
MIN.
3'-6"
3"
1/2" X 9" GALV. MACHINE BOLT WITH NUT. FLAT GALV. WASHER ON BOTH SIDES. COUNTERSINK NUT END FLUSH WITH POLE REMOVE & DEBURR EXCESS LENGTH AFTER INSTALLATION.
3" CRUSHED GRAVEL MAX. SIZE 1 1/2"

ELEVATION