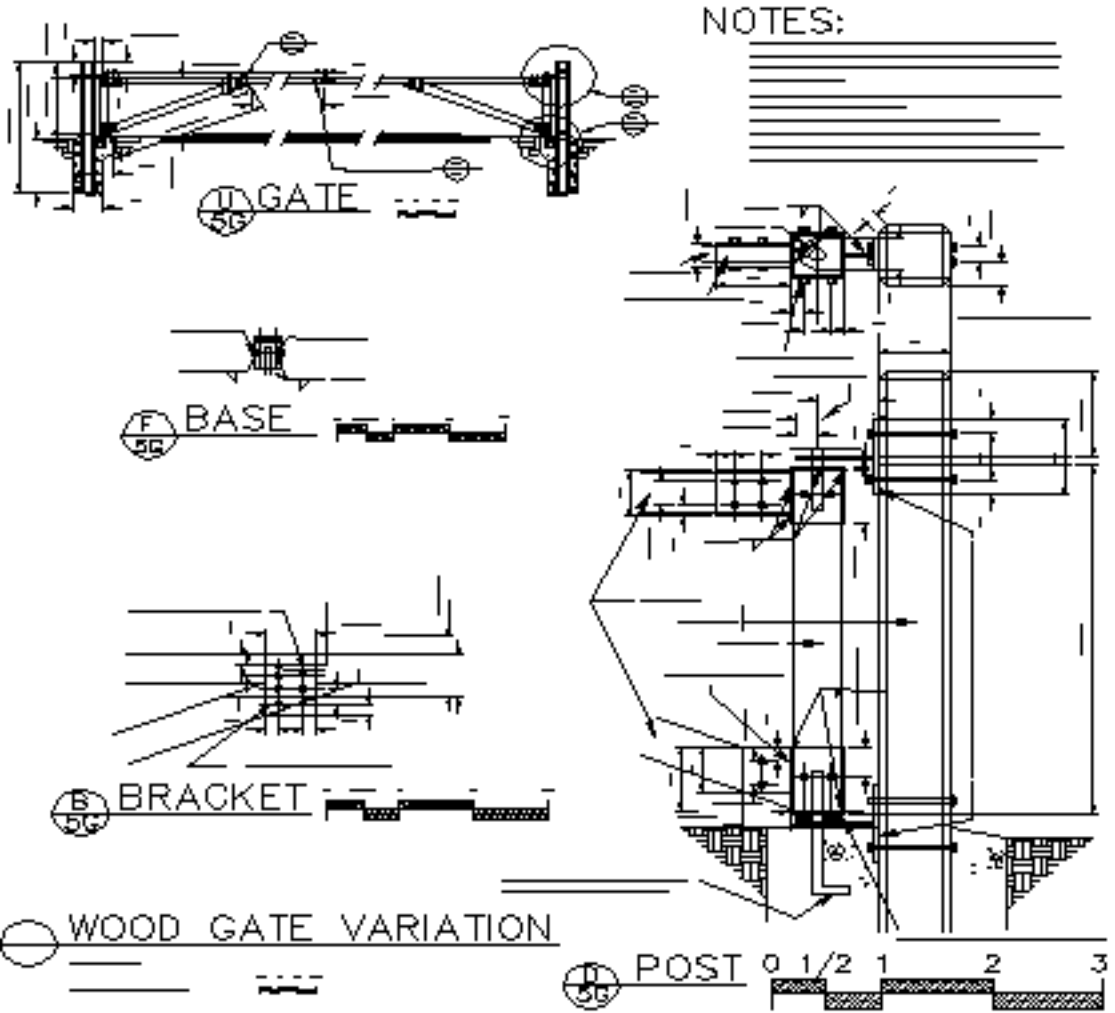
NOTES:
GATE
BASE
BRACKET
WOOD GATE VARIATION
POST
0 1/2 1 2 3