EROSION BLANKET PLAN

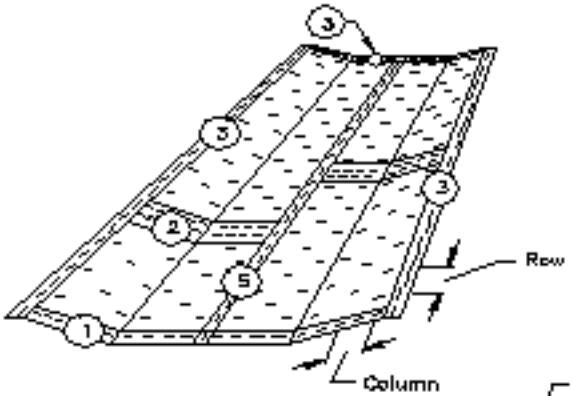

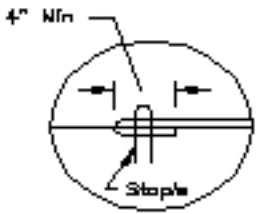

Terminal Fold

Jute Mesh Only

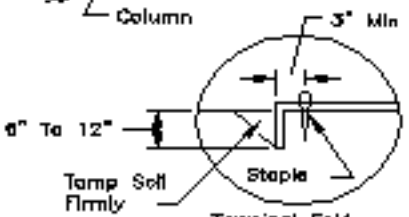

Terminal Fold

Excelsior Blanket
Erosion Control Paper

DETAIL 1

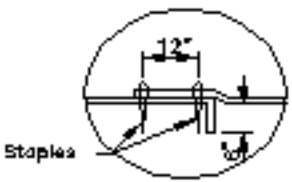

Junction Slot

Jute Mesh
Erosion Control Paper

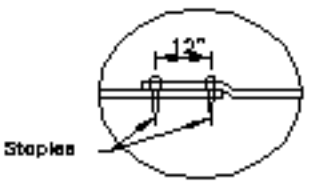

Junction Slot

Excelsior Blanket

DETAIL 2