DETAIL 4 – PIPE SLOPE DRAIN

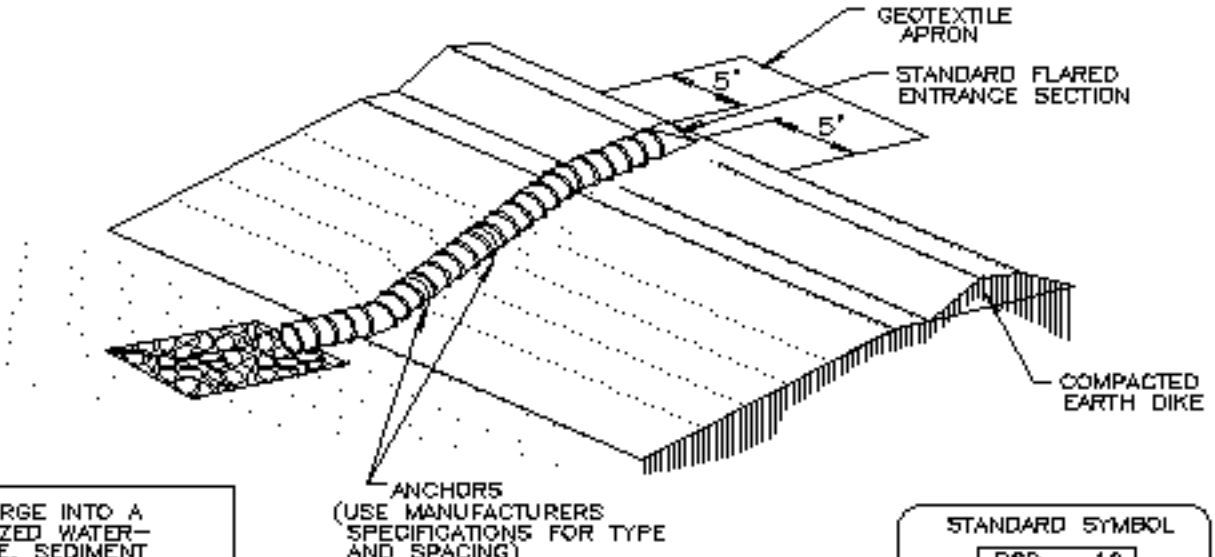

DISCHARGE INTO A STABILIZED WATER-COURSE, SEDIMENT TRAPPING DEVICE, OR INTO A STABILIZED AREA AT A NON-EROSIVE VELOCITY. REF: 18.0 ROCK OUTLET PROTECTION

STANDARD SYMBOL

PSD – 12

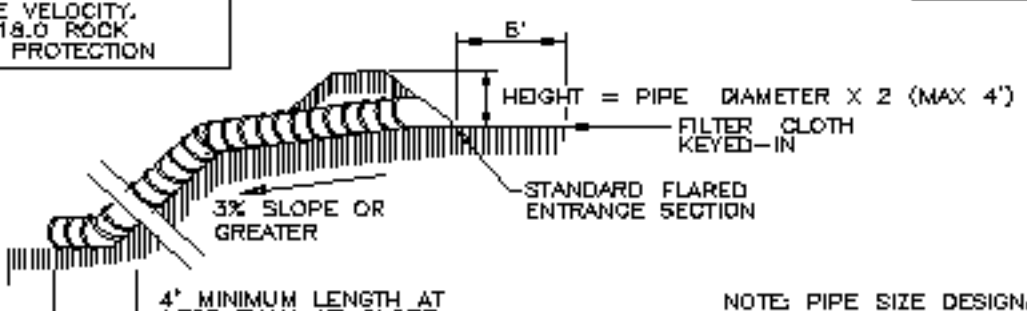

NOTE: PIPE SIZE DESIGNATION IS: PSD 12 – PIPE SLOPE DRAIN WITH A 12" DIAMETER PIPE.