Theory of Drainage

BAE 590F

R. Wayne Skaggs
Department of Biological and Agricultural Engineering
North Carolina State University

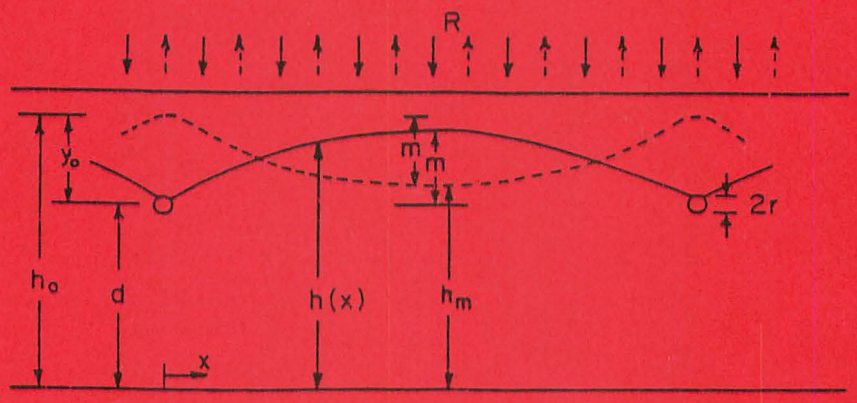

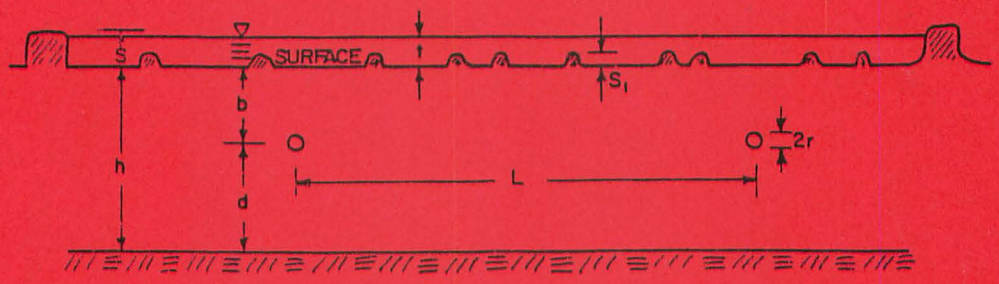

Spring 2008

The Theory of Drainage

R. Wayne Skaggs
Department of Biological and Agricultural Engineering
North Carolina State University

A set of notes for the course BAE 771, SSC 771; Theory of Drainage-Saturated Flow

CHAPTER 1

Soil Water Statics

CHAPTER 1

SOIL WATER STATICS

1.1. The Soil System

The soil system is composed of primarily three components, solids, air and water. In most cases the solids, which include both organic and inorganic particles, make up between 35 and 75 percent of the total volume. The remainder of the volume is void space which may be filled with air or water. Solids, air and water are necessary for optimum plant growth and the proportion of each component at a given time is dependent on soil, climatic, and man influenced factors. Near the surface a substantial part of the soil volume may be occupied by living materials in the form of plant roots, worms, bacteria, etc. The proportion and activity of these elements is obviously dependent on the soil, crop or cover, time of year and other factors and it is usually ignored in analysis of soil water movement. However, biological activity may have a profound influence on the state and movement of water in surfacial soils.

The solid fraction of soils may be broken into an inorganic or mineral fraction and an organic fraction. Although thousands of hectares of organic soils are under cultivation, most agricultural soils are classified as inorganic. Inorganic soils still contain some organic matter in the form of humus. Micro-organisms (e.g. bacteria, fungi, protozoa), macro-organisms (e.g. worms, insects) and plant roots are other sources of organic matter. The organic matter content of most soils is in the range of 2 to 5 percent by weight. Arid and very sandy soils may have organic matter contents of less than one percent, which is considered low. Soils having organic matter contents of greater than 30 percent to depths greater than 40 cm are classified as organic soils.

Texture

The mineral fraction of soil is classified according to size of single soil particles. The size distribution is referred to as "texture" with the primary textural fractions being sand, silt and clay. A commonly accepted classification scheme was developed by the Soil Survey staff, U.S. Department of Agriculture (1951) and is given in Table 1.1.

Table 1.1. Classification according to particle size.

Texture	Size range
Clay	0 - 2 μ (microns, 10^{-6} m)
Silt	2 - 50 μ
Very fine sand	50 - 100 μ
Fine sand	100 - 200 μ
Medium sand	200 - 500 μ
Coarse sand	0.5 - 1 mm
Very coarse sand	1 - 2 mm
*Fine gravel	6 - 19 mm
*Coarse gravel	19 - 76 mm
*Small cobbles	76 - 152 mm
*Large cobbles	152 - 305 mm
*Boulders	>305 mm

*Particles larger than 2 mm are not classified as soils. The classifications given are the ASTM D 2488 classifications after Bouwer (1978).

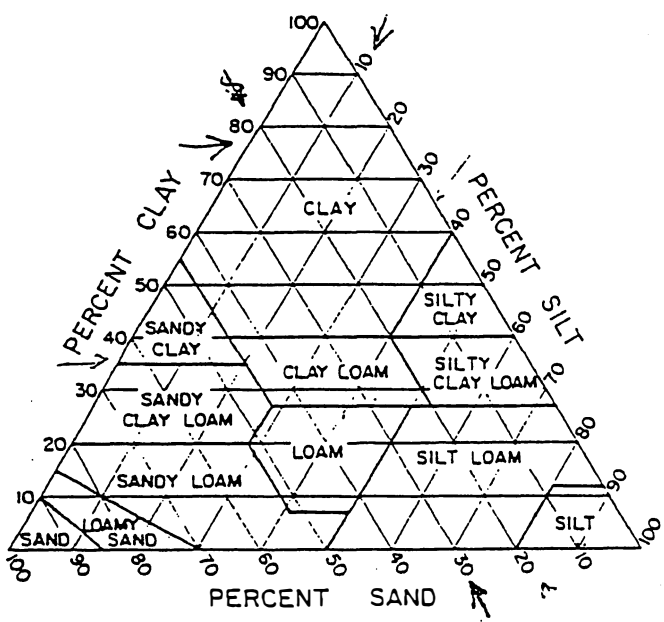

Figure 1.1. Soil textural chart showing the percentages of sand, silt and clay for the various textural classes. (From Soil Survey Staff, 1951.)

The particle size distribution may be plotted as shown in Figure 1.2. The percentage by weight of a given particle size is determined by a *mechanical analysis* and plotted on semi-log paper. The "percent smaller than a given size" is the percentage that would pass through a sieve with openings of that size. Soils with most of the particles within a small size range are said to be "poorly graded" (e.g. the uniform sand in Figure 1.2). Conversely, "well graded" soils have a more gradual distribution curve (Figure 1.2).

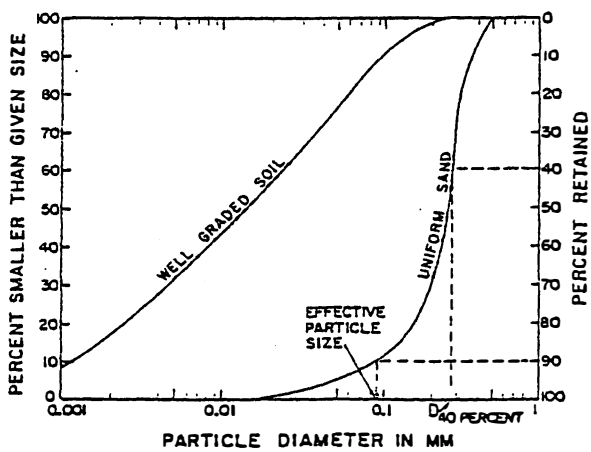

Figure 1.2. Particle size distribution for a uniform sand and a well graded soil.

Agricultural soils are commonly classified and referred to by such terms as sandy loam, silt loam, sandy clay, etc. These textural designations are determined on the basis of the mass percentages of sand, silt and clay sized particles (Figure 1.2). For example, a soil with 30% sand, 35% silt and 35% clay sized particles would be classified as a clay loam.

Porosity and Void Ratio

The total unit volume of soil or rock V_t may be divided into the volume of solids V_s and the volume of voids V_v; i.e. $V_t = V_s + V_v$. The porosity n is defined as

$$\mathbf{n = V_v/V_t} \tag{1.1}$$

The porosity of mineral soils varies between about 25% for compacted soils to 70% for loose topsoils. The porosity also depends on the size and shape of the primary particles. Approximate porosity ranges for soils and other geologic materials are given in Table 1.2. They are based on

data summarized by Davis (1969) as modified by Bouwer (1978) and Freeze and Cherry (1979). The volume of voids may be written as $V_v = V_a + V_w$ where V_a = volume of air and V_w = volume of water.

The *void ratio* e is defined as the ratio of the volume of voids to the volume of solids,

$$\mathbf{e = V_v/V_s} \tag{1.2}$$

Table 1.2. Approximate ranges of porosity values of unconsolidated materials.

Material	Porosity (%)
Clay	40 - 70
Silt	35 - 50
Fine sand	40 - 50
Medium sand	35 - 40
Coarse sand	25 - 40
Gravel	20 - 40
Sand and gravel mixes	10 - 30
Limestone	0 - 50
Sandstone	5 - 30
Shale	0 - 10
Crystalline rock	0 - 10

The void ratio is commonly used in soil mechanics, in applications where the soil is compacted, etc. Note that, for a given soil mass, the denominator remains constant when the soil volume is changed. The value of e varies from about 0.7 for dense sands to greater than 1.5 for well structured clays.

Particle Density and Bulk Density

The particle density ρ_s is the mass per unit volume of the soil solids,

$$\boldsymbol{\rho_s = M_s/V_s} \tag{1.3}$$

where M_s is the mass of the solids. For most mineral soils ρ_s is between 2.6 and 2.7 gm/cm^3. The presence of organic matter lowers the mean value of ρ_s. The density of the soil solids is often expressed in terms of the *specific gravity* which is the ratio of the particle density to the density of water. Since the density of water is unity in the metric system, the specific gravity has the same numerical value as ρ_s although the dimensions are unitless.

The *bulk density* or *dry bulk density* is the ratio of the mass of the dry soil to its volume,

$$\rho_b = M_s/V_t \tag{1.4}$$

where the volume V_t is generally the wet volume, or the volume determined before drying. Of course ρ_b can be calculated from ρ_s and n or ρ_s and e as,

$$\rho_b = (1-n)\ \rho_s \tag{1.5}$$

$$\rho_b = \rho_s/(1+e) \tag{1.6}$$

Water Content

The water content is often called moisture content in soil and water engineering. Since the wetting phase of the system is almost always water rather than some other liquid, the term water content is more appropriate and will be used herein. The water content may be defined on a volume basis, a dry weight basis or a wet weight basis.

The volume based or volumetric water content θ is the ratio of the volume of water to the total soil volume

$$\theta = V_w/V_t \tag{1.7}$$

It has units of cm^3/cm^3 and is usually expressed as a decimal fraction or a percentage. The soil is considered to be a fixed matrix with a constant V_t in most water management applications, and the volumetric water content is preferred over the other definitions.

The dry weight or dry mass based water content, m, is defined as,

$$m = M_w/M_s \tag{1.8}$$

where M_w is the mass of water in the sample and M_s is the mass of the solids. This term is often called the gravimetric water content and is also unitless. It is commonly used in soil mechanics.

The wet weight weight based water content, M, is less frequently used and is defined as

$$M = M_w/(M_s+M_w) = m/(1+m) \tag{1.10}$$

This parameter is frequently used in characterizing the moisture content of grains and other agricultural products, but isn't used very much in soil physics or soil and water engineering.

Basic definitions relative to soil and water conditions are summarized in Table 1.3.

Table 1.3. Basic definitions relative to soil and soil-water conditions.

Parameter	Symbol	Definition
Total Porosity	n	$\frac{\text{Volume of Pores}}{\text{Total Volume}} = \frac{V_v}{V} = \frac{V_a + V_w}{V}$
Void Ratio	e	$\frac{\text{Volume of Pores}}{\text{Volume of Solids}} = \frac{V_v}{V_s} = \frac{V_a + V_w}{V_s}$
Bulk Density or Dry Bulk Density	ρ_b	$\frac{\text{Mass of Dry Soil}}{\text{Total Volume}} = \frac{M_s}{V}$ (g/cm^3)
Particle Density	ρ_s*	$\frac{\text{Mass of Dry Solids}}{\text{Volume of Dry Solids}} = \frac{M_s}{V_s}$
Volumetric Water Content	θ	$\frac{\text{Volume of Water}}{\text{Total Volume}} = \frac{V_w}{V} = \frac{V_w}{V_w}$ (cm^3/cm^3)
Water Content, Dry Weight Basis	m	$\frac{\text{Mass Water}}{\text{Mass Solids}} = \frac{M_w}{M_s}$
Water Content Wet Weight Basis	M	$\frac{\text{Mass Water}}{\text{Total Mass}} = \frac{M_w}{M_s + M_w}$

*For mineral soils, ρ_s is usually between 2.6 to 2.7 gm/cm^3. In the absence of more accurate information a value of 2.65 is commonly assumed.

1.2. Soil Water Under Static Conditions

In order to understand the movement and storage of water in soils it is necessary to examine soil water relationships under static conditions. First consider a column of soil which is completely saturated with a thin film of water ponded on the surface. Water in the voids is continuous and, assuming the soil matrix is fixed, the pressure distribution is the same as it would be for a water column of the same height. Consideration of the sum of forces acting on an elemental volume of water in the vertical direction shows that

$$\mathbf{dp/dz = -\rho g} \qquad (1.11)$$

where p is pressure, ρ the density of water, g the acceleration due to gravity, and z the vertical position coordinate defined as positive in the upward direction. By integration,

$$\mathbf{p/\rho g + z = H} \qquad (1.12)$$

where H is a constant. In most soil water or groundwater applications, p is expressed as gage

rather than absolute pressure. So p refers to the soil water pressure in excess of the atmospheric pressure, p_o. The quantity $p/\rho g$ is defined as the *pressure head*, h, with units of length, i.e. $h = p/\rho g$. Likewise, z, the distance above the datum plane, is the *position head* and the sum of the position and pressure heads is the *hydraulic head*, H.

$$\mathbf{H = h + z} \tag{1.13}$$

For static conditions the hydraulic head H is constant, and the distributions of pressure, position and hydraulic heads are shown in Figure 1.3.

The pressure head at a given point may be defined as the vertical distance that water will rise in an open tube with its end inserted at that point (Figure 1.4). Such a tube is called a *piezometer*. The position head z is simply the distance of the point above the datum

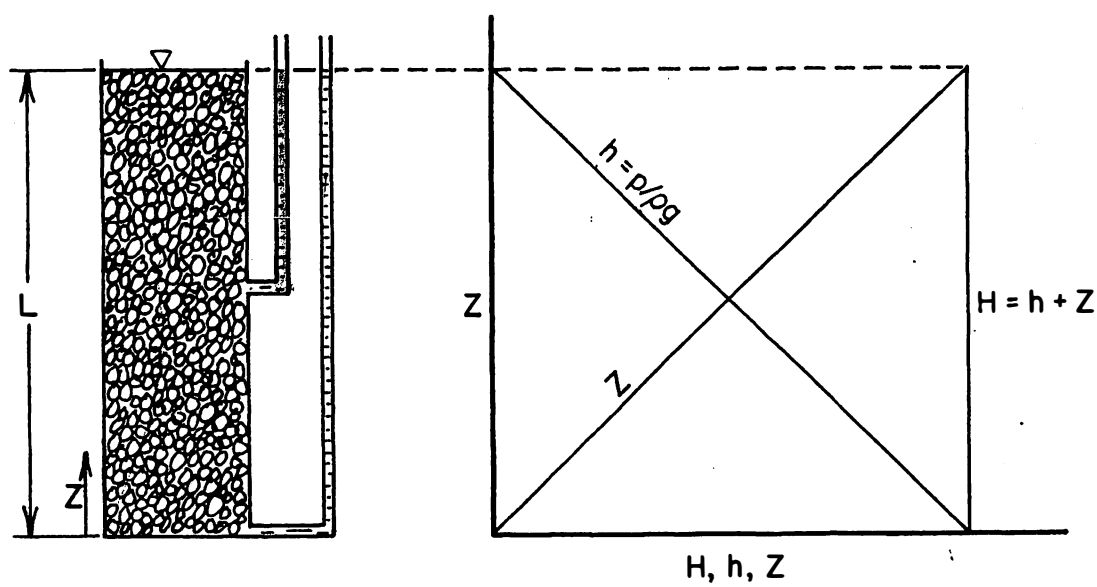

Figure 1.3. Distribution of soil water pressure head, position head and hydraulic head for a vertical column of saturated soil.

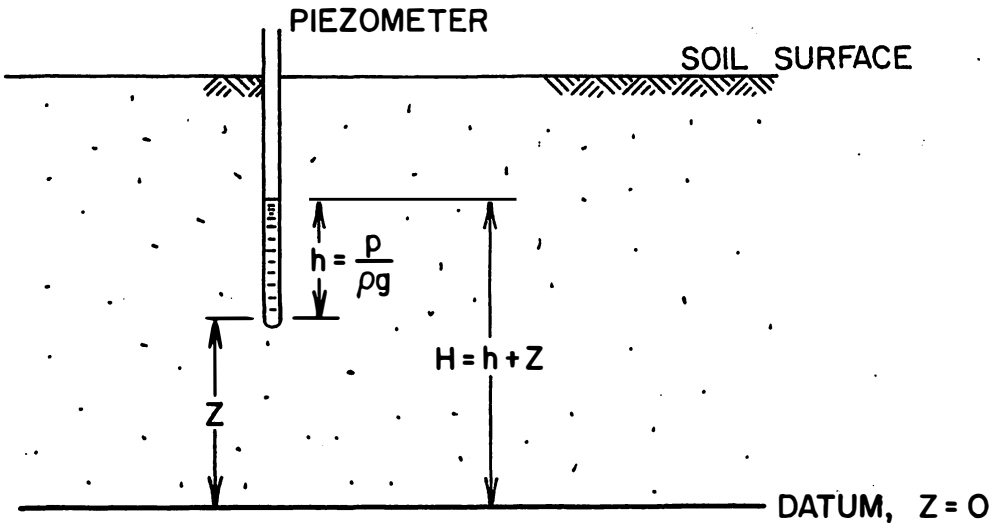

Figure 1.4. Pressure head, position head and hydraulic head as determined by a piezometer at point A.

Now consider the column of Figure 1.5 at equilibrium with the water table or the free water surface at $z = \ell$. Pores above the water table may contain both air and water with the water phase still connected via films around and between the solid particles. The soil water system in this condition is called unsaturated. We will see later that the pores may still be filled with water (saturated) some distance above the water table. Again, if the soil water is static, the total hydraulic head is constant and equal to the distance of the free surface above the datum.

$$H = p/\rho g + z = \ell$$

Then for $z > \ell$ the soil water pressure is negative as shown in Figure 1.5.

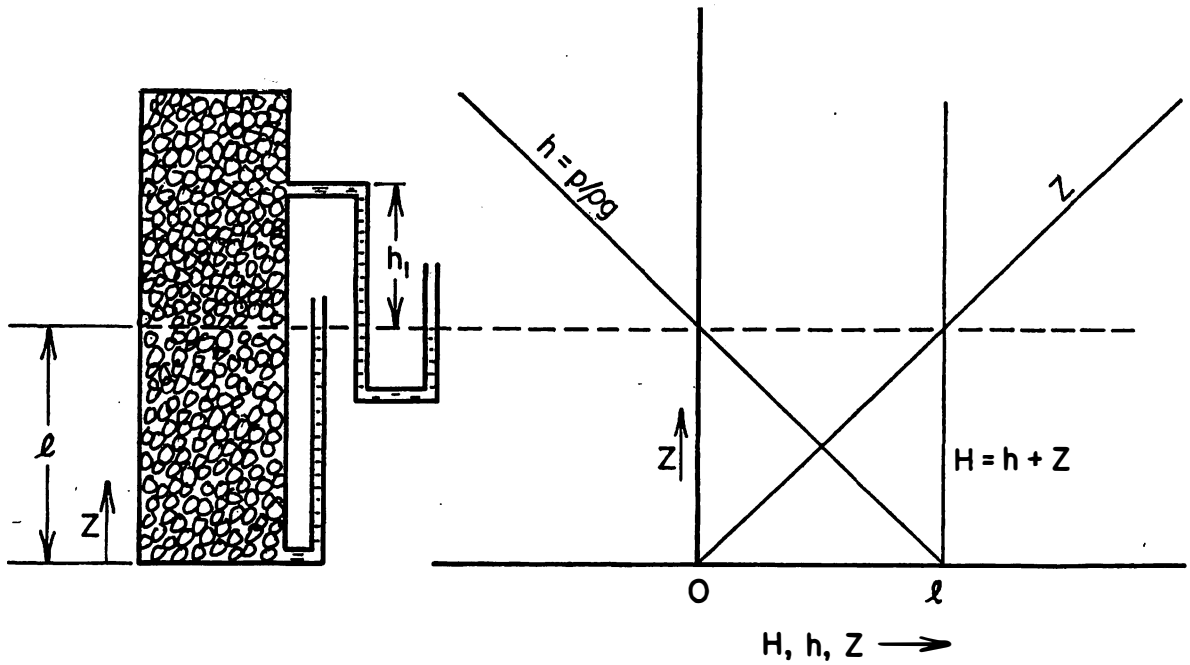

Figure 1.5. Soil water pressure, position, and hydraulic heads for a vertical column with a water table a distance ℓ from the bottom.

The forces active in the soil and liquid phases of an unsaturated porous materials are molecular in nature. They may be divided into adhesive forces, those forces acting between unlike molecules, and cohesive forces, those forces acting between like molecules. These forces have been discussed in detail by others (e.g., Day et al., 1967; Childs, 1969; Kirkham and Powers, 1972) and the reader is referred to these works for an in depth treatment of this subject.

When the soil water pressure is less than atmospheric $h=p/\rho g$ is commonly referred to as suction head or tension head in which it maintains a positive sign; i.e. $h=p/\rho g=-25$ cm would be a suction or tension head of +25 cm. It has also been called capillary head because of the role of capillary forces in the soil water system. The term matric potential now seems to be preferred when the pressure is negative because it denotes the total of the forces holding the water in the soil matrix. Thus h would be termed the matric head for unsaturated conditions. The term $h = p/\rho g$ will be referred to herein as *pressure head* for both positive and negative pressures. It is simply the potential energy per unit weight that the soil water has by virtue of its pressure. It also may be expressed as the height of a column of water which is in equilibrium with the soil at the point in question. The potential energy of the soil water due to pressure, position or other factors such as solutes may also be expressed in terms of energy per unit mass or energy per unit volume as discussed by Hillel (1971).

Negative pressure heads may be measured by using a *tensiometer* rather than a

piezometer. A tensiometer is shown schematically by the upper tube in Figure 1.5. A porous membrane, usually a ceramic bulb or cup, is used to connect the water in the tube with the soil water. The porous membrane is permeable to water but not to air, so long as rated pressure head limitations are not exceeded. Therefore the pressure head in the cup reaches equilibrium with that in the soil water and is indicated by the distance h_1, in Figure 1.5. Note that the pressure head is still the height of a column of water in equilibrium with the soil water, but that the vertical distance of the water column above the point is negative. In application tensiometers usually consist of a closed water filled tube with a ceramic cup at the end (Figure 1.6). The soil water pressure head is measured by a vacuum gage or a manometer.

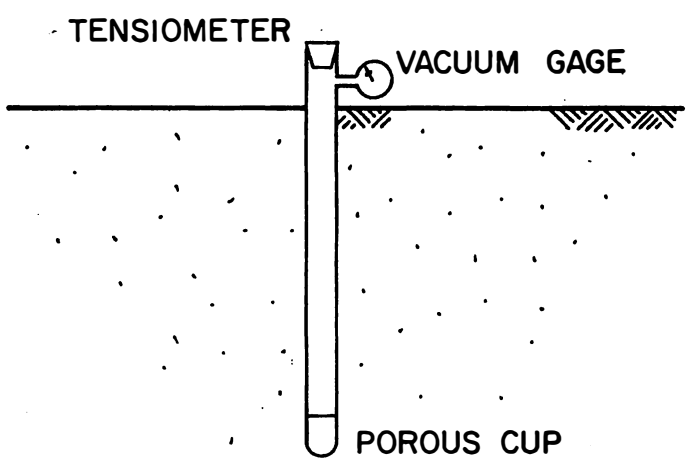

Figure 1.6. Tensiometer for measuring soil water pressure heads. Both positive and negative pressures may be determined.

To gain a better understanding of the relationship between soil water pressure and the distribution of soil water, it is useful to consider a capillary tube analogy. A capillary tube of radius, r is inserted into a container of water open to the atmosphere (Figure 1.7). The water will rise in the tube a distance h_c. Considering a free body diagram of the water in the tube the upward forces are due to the surface tension $T = 2\pi r\sigma$, where σ is the coefficient of surface tension. At equilibrium the upward force balances the downward force due to the weight, W, of the water:

$$\mathbf{T \cos \theta = W}$$

$$\mathbf{2\pi r\sigma\cos\theta = \pi r^2 h_c \rho g}$$

$$\mathbf{h_c} = \frac{2\sigma\cos\Theta}{\rho g r} \qquad (1.14)$$

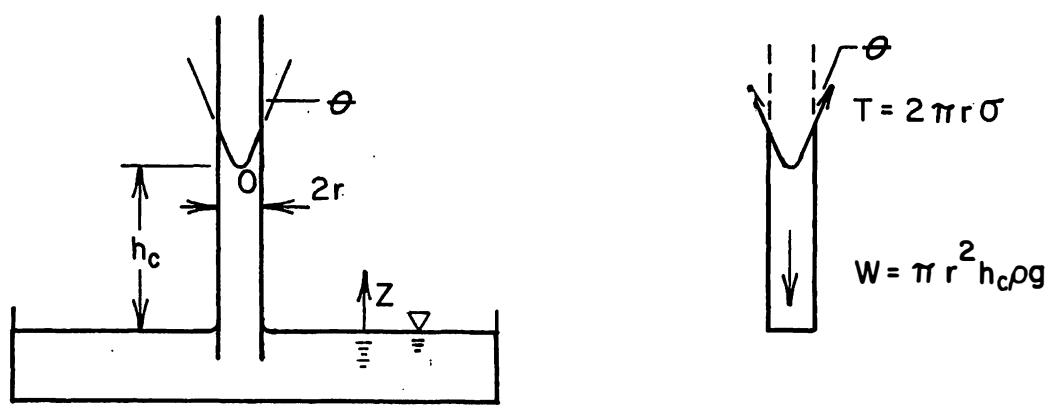

Figure 1.7. Water in a capillary tube.

The pressure in the water at point 0 just under the surface film may be obtained by either a free body diagram of the film or by noting that the water is at rest so that:

$$\mathbf{p/\rho g + z = H = constant.}$$

At $z = 0$, $p = 0$ So $p/\rho g + z = 0$ and $p/\rho g = -z$.

Therefore at $z = h_c$, $p/\rho g = -h_c = -\dfrac{2\sigma\cos\theta}{\rho g r}$.

$$\mathbf{p} = \frac{\mathbf{-2\sigma\cos\Theta}}{\mathbf{r}} \qquad (1.15)$$

Note that the quantities σ and ρ are properties of the liquid while r is a property of the medium (tube) and θ is dependent on both the liquid and the medium. Likewise unsaturated soil contains both water and air and the soil water pressure is dependent on properties of both the soil matrix and the water or other liquid. Equation 1.15 assumes that the pressure in the tube above the miniscus is atmospheric (gage pressure of zero). For nonzero air pressure, equation 1.15 may be written:

$$p - p_a = \frac{-2\sigma\cos\Theta}{r} \tag{1.16}$$

where p_a is the pressure (gage) above the miniscus. For most soil minerals the contact angle, θ, is zero.

Taking $\theta = 0$, Kirkham and Powers (1972) showed that, for general curved minisci,

$$\mathbf{p - p_a = \sigma \cdot (total\ curvature),} \tag{1.17}$$

where total curvature = $1/r_1 + 1/r_2$. The radius of curvature, r, is positive when it is inside the liquid phase and negative when outside the liquid. An example of a three dimensional film surface is shown in Figure 1.8. In this example,

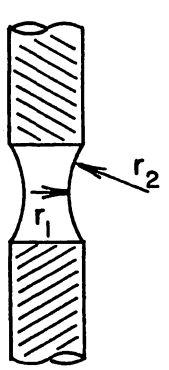

Figure 1.8. Radii of curvature in three-dimensional space (after Kirkham and Powers, 1972).

$$p - p_a = \sigma \left(\frac{1}{r_1} - \frac{1}{r_2} \right)$$

and the pressure will be negative when $r_1 > r_2$.

1.3. Soil Water Characteristic

As shown in Figure 1.9, air-water interfaces in a soil matrix will have much more complex shapes than those considered above. Here the soil sample is placed on a porous plate which serves to hydraulically connect the water in the soil matrix with water below the plate. The porous plate must have small pores which will not desaturate when the outlet tube is lowered. Assuming equilibrium when the outlet tube is at z = -a, the hydraulic head in the system is constant, and, since p = 0 at z = -a, H = -a everywhere and h = p/ρg = -a at z = 0, the midpoint of the soil sample. If the outlet tube is lowered a larger distance to z = -b, water will drain from the sample decreasing the radii of curvature of the water films. Water will continue to drain until the films adjust to give an equilibrium soil water pressure head of p/ρg = - b. By measuring the volume of water drained from the sample as the outlet is lowered in successive steps, the water content at each step can be determined and plotted as a function of the pressure head. This relationship, θ(h), is called the soil water characteristic or the soil water retention curve.

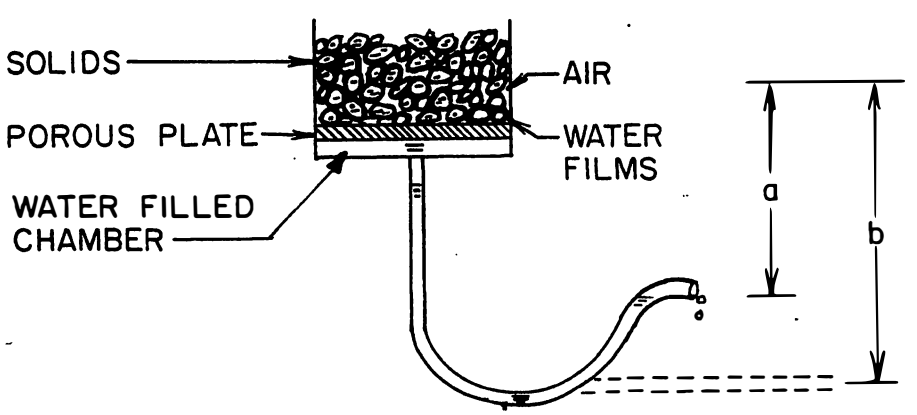

Figure 1.9. Soil sample on a tension table.

Returning to the capillary tube analogy, consider a porous material of total volume V made up of bundles of capillary tubes of three different radii, r_1, r_2, and r_3. The total porosity is $V_e/V = 0.45$ and there are more tubes with the smaller diameters so that $V_1/V = V_2/V = V_3/V = 0.15$, where V_1, V_2 and V_3 are the void volumes corresponding to r_1, r_2 and r_3, respectively. The porous material is placed on a tension table and initially saturated as shown in Figure 1.10. As the outlet is lowered, some water will be released as the miniscus in each capillary becomes curved in response to the increased suction. However, the amount of water released will be small until the outlet is lowered to $z = -h_1$ corresponding to the capillary rise that would occur in a tube of radius r_1. At that point the tubes with radius r_1 will begin to drain and will empty when the outlet is $h_1 + 1$ cm below the top of the sample. Likewise the tubes with radius r_2 and r_3 will begin to empty (beyond the small amount of water released as the curved miniscus is formed) when the outlet tube is lowered to $z = -h_2$ and $z = -h_3$, respectively. The relationship between pressure head and water content could then be plotted as shown in Figure 1.11. Note that if the outlet elevation is raised in the

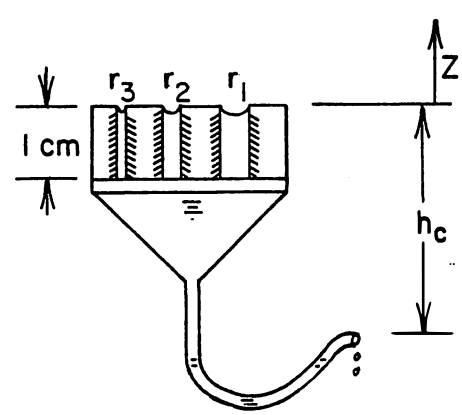

Figure 1.10. Capillary tube porous medium on a tension table.

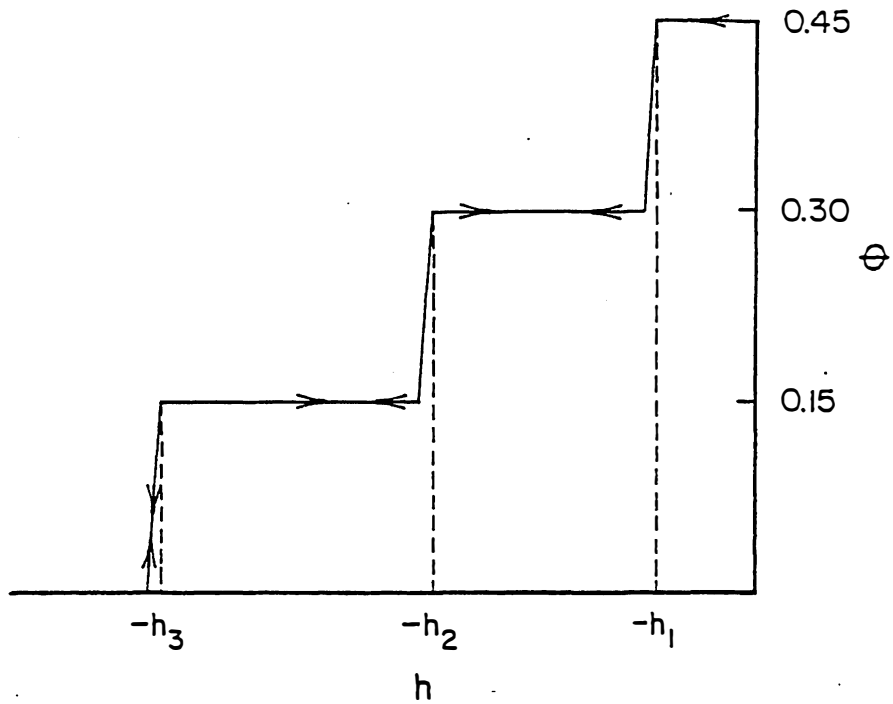

Figure 1.11. Relationship between water content and pressure head for a bundle of capillary tubes.

reverse order to the above and water is introduced into the capillaries to establish an equilibrium condition at each outlet elevation, the capillary tubes will fill in the same fashion. So the relationship shown in Figure 1.11 will be the same whether the tubes are draining or being filled. Note also that there is a unique functional relationship $\theta(h)$ for this material, i.e. for every θ there exists a single h value and for every h there is a corresponding single θ.

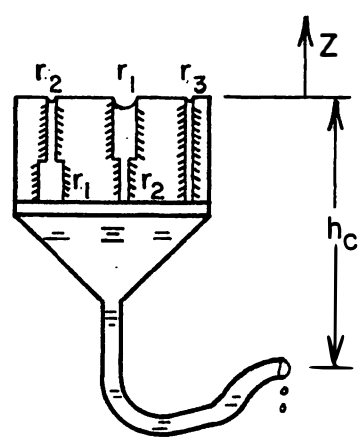

Figure 1.12. A porous material made up of nonuniform capillary tubes.

Now consider a similar material made up of a bundle of capillary tubes of the three shapes given in Figure 1.12. Again we will assume that one-third of the total pore volume is made up of each of the tube shapes shown. Further assume that the irregular shaped tubes have twice as much volume in the big part of the tube as in the thin section. Let h_1, h_2 and h_3 be the capillary rise that would occur in tubes with radii r_1, r_2 and r_3, respectively. If the outlet tube is then lowered to $z = -h_1$ the tubes with radius r_1 at the top will drain down to the narrow section. If the outlet is further lowered to $z = -h_2$, the irregular shaped tubes will empty completely when $z= -h_2 - 1$. Likewise the tubes of radius r_3 will empty when the outlet is lowered to $z = - h_3 - 1$. The relationship between water content and pressure head is plotted in Figure 1.13. Now if a water supply is attached to the outlet and the outlet raised in the reverse order to the above, the pores will fill but the $\theta(h)$ relationship will be different than for drainage as shown in Figure 1.13. That is, when the outlet is raised to $z = h_2$, only the narrow section of the middle pore in Figure 1.12 will be filled, whereas the entire left pore plus the narrow section of the middle pore were filled when $z = - h_2$ during drainage. In this case the $\theta(h)$ relationship is not unique and, for a given h, the value of θ depends on the history of wetting and draining the material. This dependence of $\theta(h)$ on whether the material is being drained or wetted is called *hysteresis* and is exhibited by most natural soils.

A typical soil water characteristic for a natural soil is shown in Figure 1.14. The dotted line ABC represents the drainage relationships which would be obtained if the soil is initially saturated by wetting under suction or by wetting the sample very slowly so as to exclude entrapped air. It is this relationship which is often measured in the laboratory using standard techniques. The curve CDE is a wetting or imbibition relationship termed the "resaturation" curve by Topp and Miller (1966). The water content at $h = 0$ (point E) is less than total saturation because of entrapped air. It seems likely that in most situations where so-called "saturated" conditions exist in the field there will be entrapped air. For example, when the water table rises to the surface due to rainfall or irrigation, the process is usually rapid and air is entrapped. Then the main drainage branch of the soil water characteristic for field conditions may be represented by EFGC in Figure 1.14. If during drainage, the process is reversed and the sampled rewetted, the drainage and imbibition branches are connected by

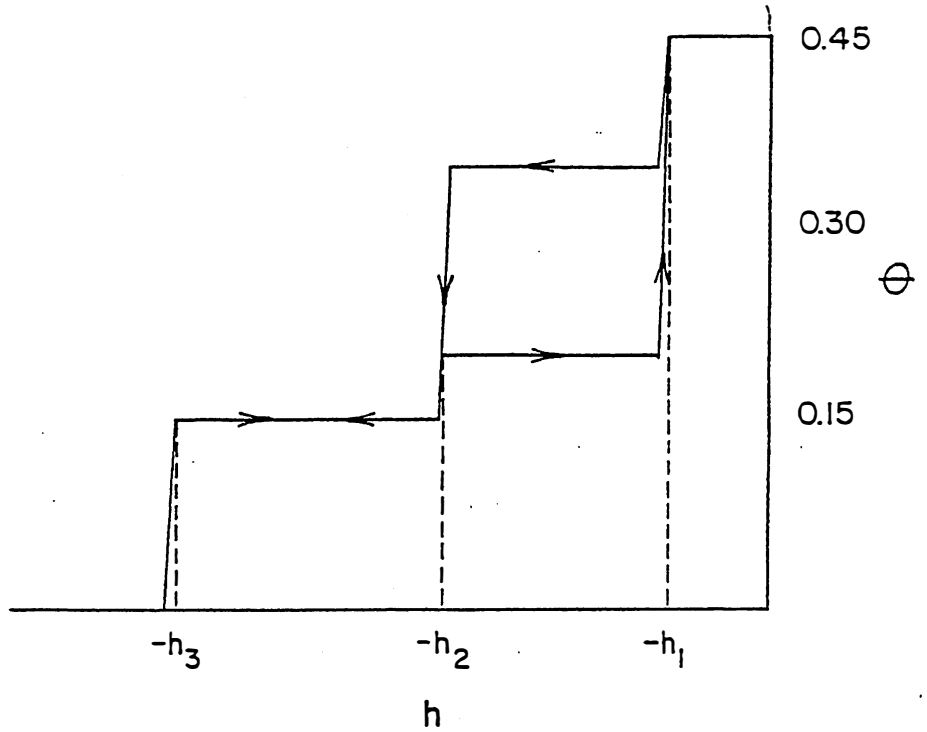

Figure 1.13. Relationship between water content and pressure head for a porous material consisting of the nonuniform capillary tubes in Figure 1.12.

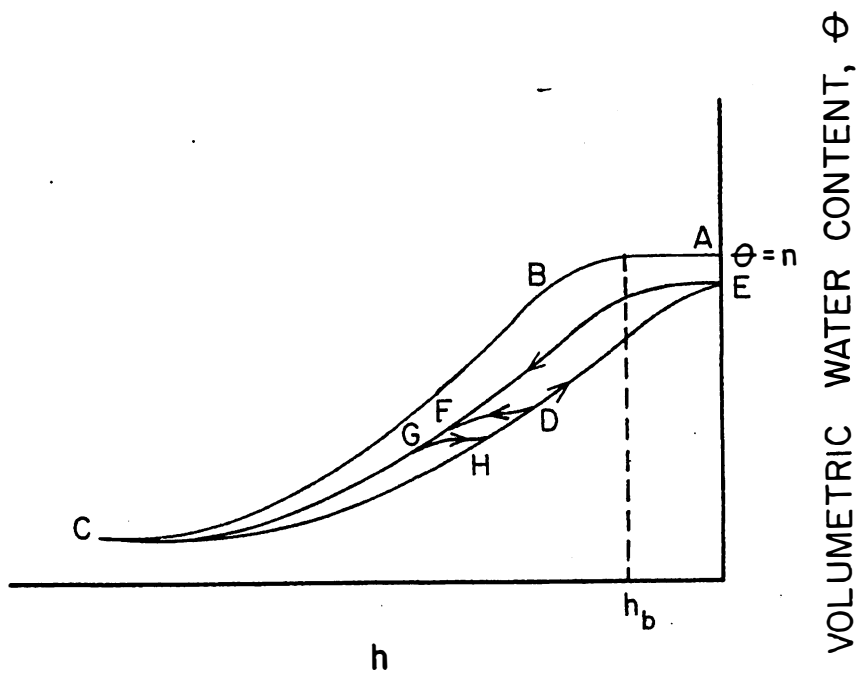

Figure 1.14. Typical soil water characteristic relationships for a natural soil.

the scanning curves GHD. Likewise, reversal during imbibition would follow the scanning curve DF. The reader is referred to Childs (1969) for a detailed discussion of hysteresis. For most field soils the engineer will be fortunate to have the drainage and imbibition branches of the soil water characteristic and will seldom have access to a full description of the scanning curves. For some applications such as drainage or subirrigation one branch of the soil water characteristic may be sufficient. In other cases, such as redistribution after infiltration, it may be desirable to have a more complete description of the soil water characteristic relationships. For most field conditions it is important that the $\theta(h)$ relationship reflect air entrappment. This will be shown in more detail in a later section. When considered with respect to soil nonuniformity and field variability, errors caused by neglecting hysteresis may be negligible. However neglecting entrapped air and using curve ABC rather than EFGC in Figure 1.14 may cause large errors in drainage calculations.

Another property of the soil water characteristic exhibited by ABC in Figure 1.14 is the non-zero air entry suction or bubbling pressure head, h_b. This is the threshold suction that must be exceeded before air begins to enter the sample. While this concept is well defined for packed soils under laboratory conditions, it will not always hold for field soils which have entrapped air and are frequently drained and rewetted. This is especially true for surface layers which may have large pores. For example, Nielsen, et al. found that, unlike handpacked sieved samples commonly used in laboratory studies, undisturbed soil cores from a Panoche soil did not have a non-zero air entry suction. For those soils that have non-zero air entry suction, the soil may be saturated several cm above the water table even though the pressure head is negative.

1.4. Measurement of the Soil Water Characteristic

The soil water characteristic can be measured by using a tension table of the type shown in Figure 1.9. Here the outlet tube is lowered to given distance h below the sample and the volume of water drained is measured. The equilibrium water content is then calculated from the known soil volume and the volume of water drained. The tension table is limited to pressure heads greater than about -300 to -500 cm of water (i.e. tensions less than 300 to 500 cm of water). For greater tensions, air is forced out of solution and the water column in the

outlet tube breaks.

Probably the most commonly used device for measuring the $\theta(h)$ relationship is the pressure plate or pressure membrane apparatus shown schematically in Figure 1.15. As in the case of the tension table and the tensiometer, the porous plate or membrane serves to connect the soil water with the water on the opposite side of the plate. The pores in the pressure plate are small so that they do not desaturate when the air pressure is increased in the sample chamber. For the pressure plate apparatus, the outlet is at a fixed elevation, usually at the center of the sample, so the soil-water pressure remains constant at near zero (soil water at the top of the soil sample will have a pressure slightly less than zero and that at the bottom slightly greater than zero, but this difference is usually negligible). Air pressure is increased in steps and water drains from the sample until the forces holding the water in the soil become equal to the pressure forces tending to "push" the water out. It can be seen from Equation 1.16 that the same curvature (and hence the same soil water content) will result in $p = 0$ and $p_a/\rho g = h_c$ as if $p/\rho g = -h_c$ and $p_a = 0$. Thus the soil-water characteristic is determined by measuring the outflow for each pressure step and computing the equilibrium water content which corresponds to a pressure head of $- p_a/\rho g$. Detailed discussions of pressure plate methods for determining the soil water characteristic are given by Klute (1964) and Vomocil (1964). Most of the published methods for measuring $h(\theta)$ were developed for the drainage or desaturation process. Tanner and Elrick (1958) modified a pressure plate apparatus for determining both the imbibition and drainage branches of the soil water characteristic. This apparatus, along with the more conventional pressure plate devices, is commercially available.

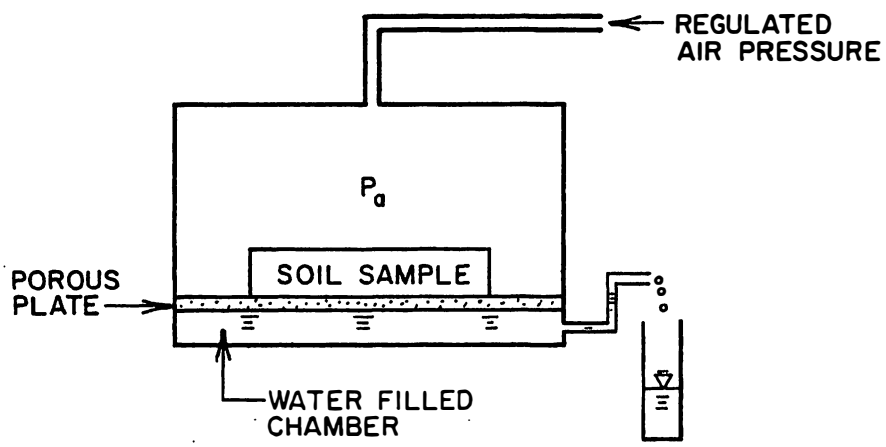

Figure 1.15. Schematic of a pressure plate apparatus.

As discussed above, the soil water characteristic is determined with a pressure plate apparatus by applying a pressure step and measuring the volume of water drained from or imbibed by the soil sample. In some cases, particularly for drier conditions (large soil water tensions), a long time is required for equilibrium conditions to be established, as indicated by the cessation of drainage or imbibition. Su and Brooks (1980) presented a method that involved the removal of a volume of water and subsequent measurement of the resulting pressure head in the sample. Equilibrium conditions were attained rapidly, but the method has not been widely tested and used to date.

1.5. Soil Water Distribution in Drained Profiles

The distribution of soil water in a profile drained to equilibrium can be obtained directly from the soil water characteristic as shown in Figure 1.16. For a vertical homogeneous

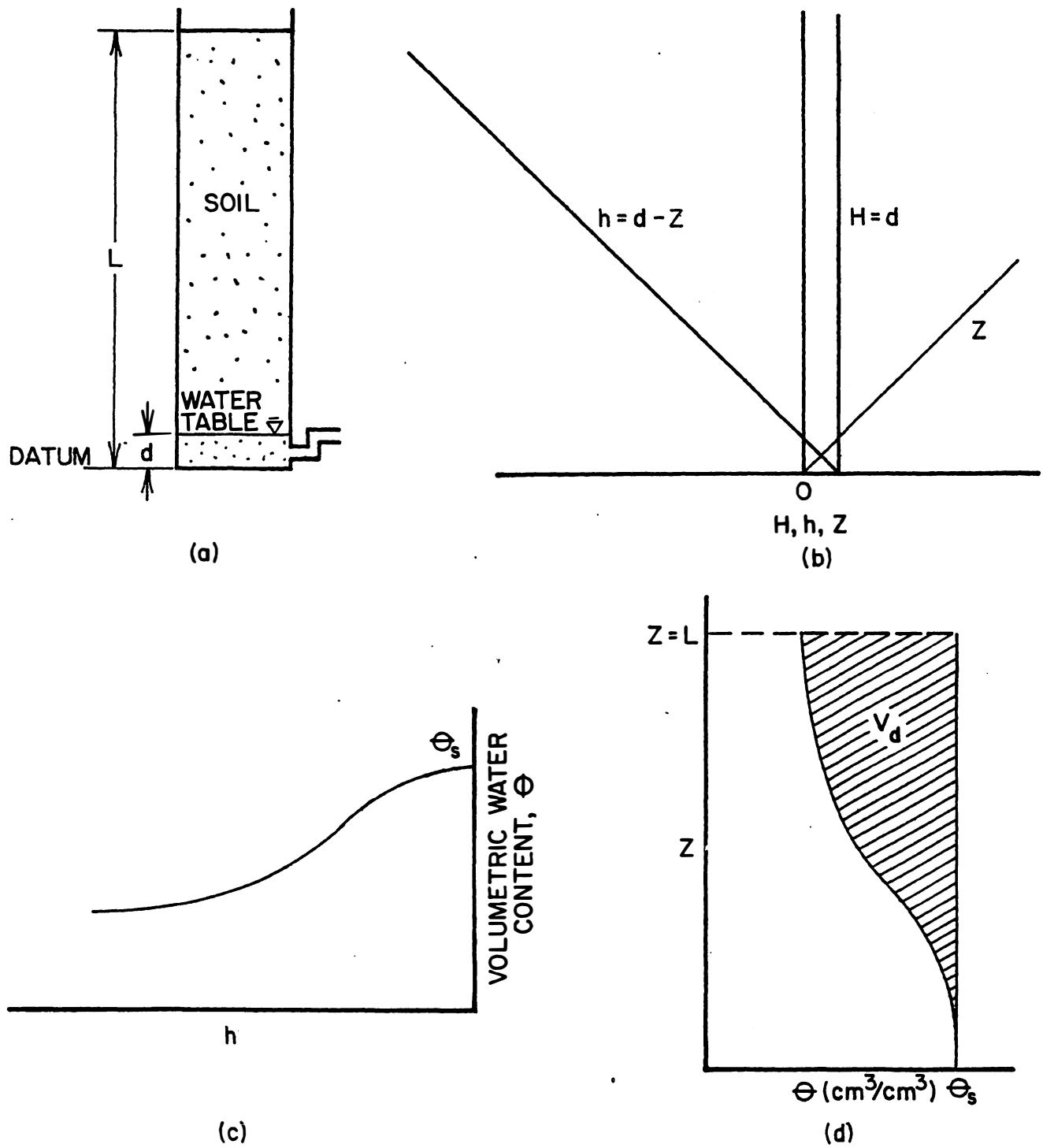

Figure 1.16. Soil column drained to equilbrium with water table at z=d (a); pressure head (b) and water content (d) distributions. The water content distribution is determined from the soil water characteristic (c). The volume of water drained when the water table is lowered from z=L to z=d is the cross-hatched area, V_d.

profile drained to equilibrium above a water table (Figure 1.16a) the pressure head may be expressed as $h = d - z$ (Figure 1.16b), where z is the vertical position and $z = d$ is the distance of the water table above the datum. The water content at any point can then be obtained from the respective h value and the soil water characteristic (Figure 1.16c). Below the water table the water content is the effective saturated value, θ_s, which may be equal to the porosity, n, if, prior to drainage, the column was saturated under suction or if it had been saturated for a long period of time. However θ_s will usually be less than n due to entrapped air as discussed in Section 1.3. When the water table is at the surface (z=L), the water content at all z will be constant and equal to θ_s. The volume of water drained, V_d, when the water table is lowered from $z = L$ to $z = d$ can be obtained by intergrating the area between $\theta = \theta(z)$ and $\theta = \theta_s$. It is shown by the cross-hatched area in Figure 1.16d.

The effect of neglecting entrapped air when calculating the drainage volume is shown in Figure 1.17. If the soil water characteristic is obtained from a sample that is initially saturated by wetting under suction, the drainage volume may be overestimated. When the water table rises in the field, air is entrapped in most cases and a water content, θ_s, less than total saturation results. While the θ_s value may be only 3 to 10 percent less than the total porosity, n, the drainage volume calculated using $\theta = \theta_n$ at $h = 0$ is approximately 30 percent higher than when entrapped air is considered.

A profile consisting of two layers of soils with different $\theta(h)$ relationships would have the same pressure head distribution as shown in Figure 1.16b. But the $\theta = \theta(z)$ would be discontinuous at the layer interface as shown in Figure 1.18. For this case the water content distribution for each layer may be obtained from the respective soil water characteristic. The effective saturated water content for each layer must be considered in determining the drainage volume for this case as is indicated in Figure 1.18. Often the surface horizons of agricultural soils will have better soil structure and higher porosity than the deeper horizons. For these soils it will be necessary to consider the soil water characteristics of individual layers in order to determine the volume of water to be drained to lower the water table to a given depth.

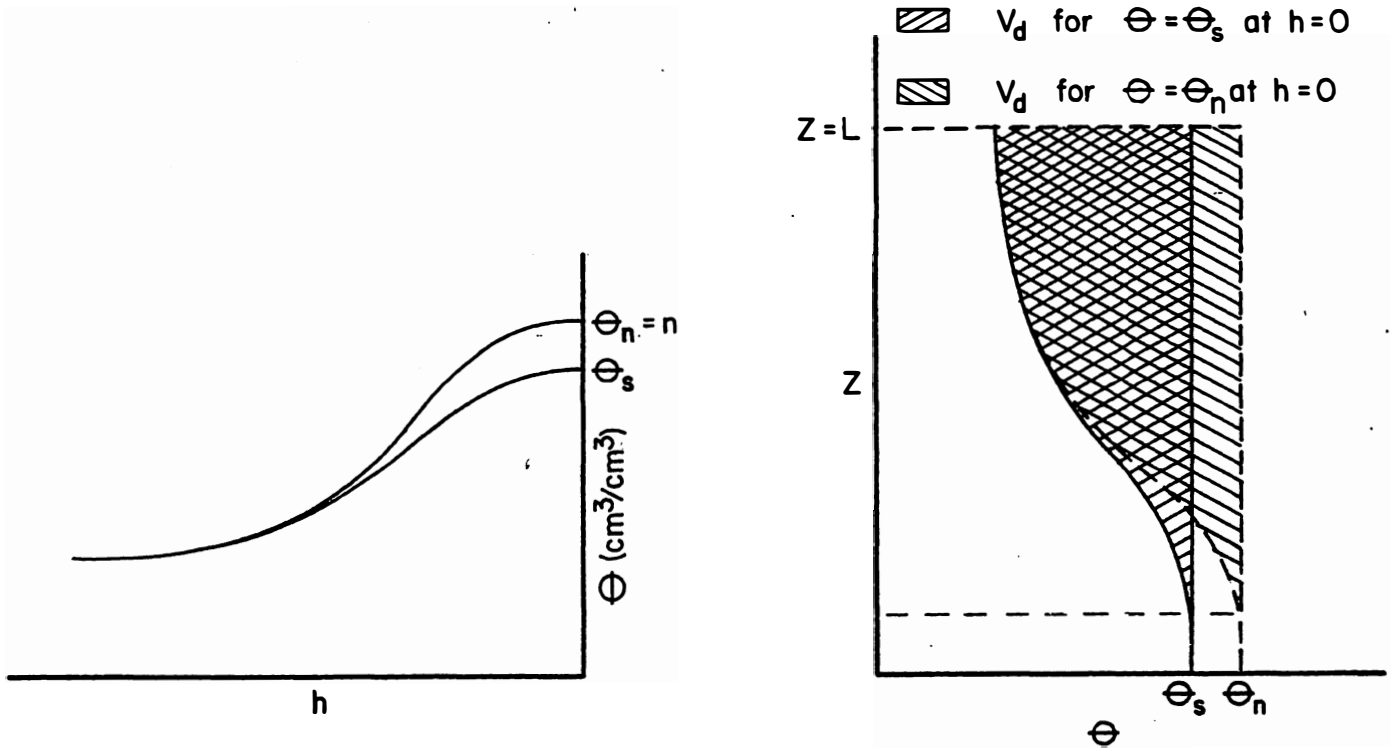

Figure 1.17. Effect of entrapped air on drainage volume for a homogeneous soil column. Neglecting the effects of entrapped air at h = 0 may cause the drainage volume to be overestimated.

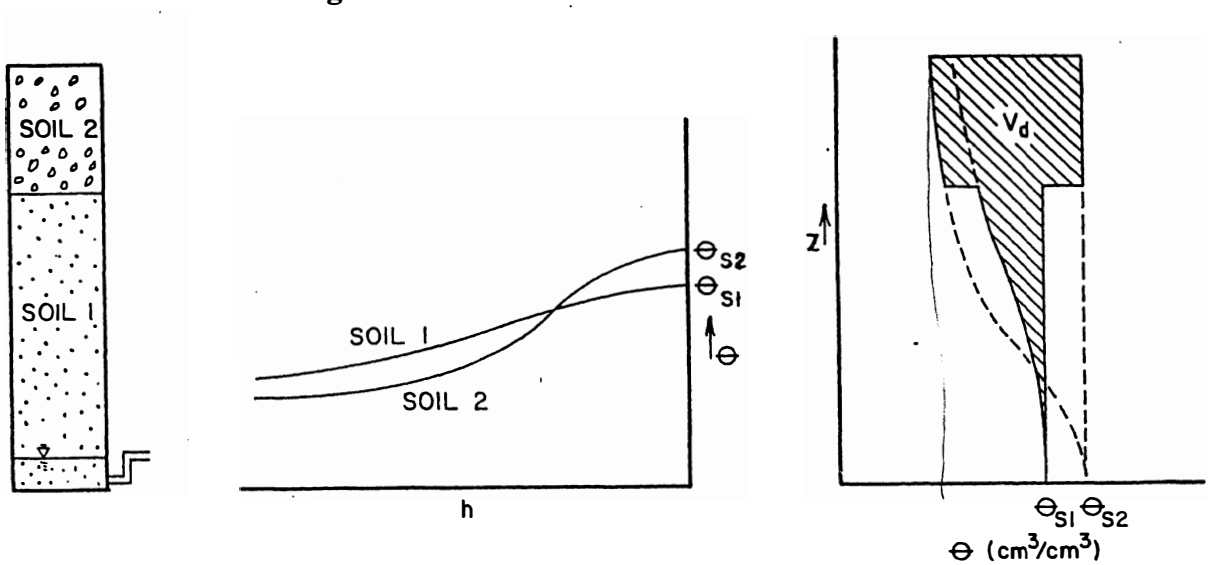

Figure 1.18. Soil water distribution for a layered soil drained to equilibrium. Volume drained when the water table is lowered from z=L to z=d is indicated by the cross-hatched area.

1.6. Drainable Porosity

Drainable porosity is one of the basic input parameters in conventional methods for predicting water table drawdown. Drainable porosity is usually defined as the volume of water per unit area that is released when the water table falls by a unit distance. In drainage design it is conventionally assumed to be constant and treated as a soil property. Childs (1960) and Taylor (1960) have shown that drainable porosity is not constant but depends on water table depth as well as other factors. Drainable porosity can be determined in the field by continuous measurement of water table depth and drain outflow as suggested by Taylor (1960) and used by Hoffman and Schwab (1964). However, outflow measurements needed for an independent determination of drainable porosity are relatively difficult, and it is usually more convenient to calculate this property from the soil water characteristic.

The drainable porosity may be calculated by assuming that the water table recedes slowly such that the vertical hydraulic gradient above the water table is zero and the unsaturated zone is essential 'drained to equilibrium' with the water table at all times. That is, it is assumed that the water content distribution at any time is the same as that which would result if the water table was stationary at a given position and the profile drained to equilibrium as shown in Figures 1.16 - 1.18. Then for one-dimensional (vertical) flow, the volume drained per unit area, V_d, when the water table drops from the surface to depth L-d, is given by the cross-hatched area in Figures 1.16 and 1.18. Defining y as the distance from the soil surface to the water table, the volume drained (Figure 1.8) may be expressed mathematically as,

$$\mathbf{V_d}(y) = \int_o^y [\Theta_s(z) - \Theta(z)]dz \qquad (1.18)$$

Where $\theta_s(z)$ is the soil water content prior to drainage, usually assumed constant and equal to the effective saturated water content and $\theta(z)$ is the equilibrium water content distribution which is obtained from the soil water characteristic.

The relationship between volume drained and water table depth may be determined by graphically or numerically calculating V_d for a range of water table depths. Relationships

are plotted for a uniform Wagram loamy sand and a layered Rains sandy loam in Figure 1.20. The soil water characteristics for the Wagram and the two layers of the Rains soils are given in Figure 1.19.

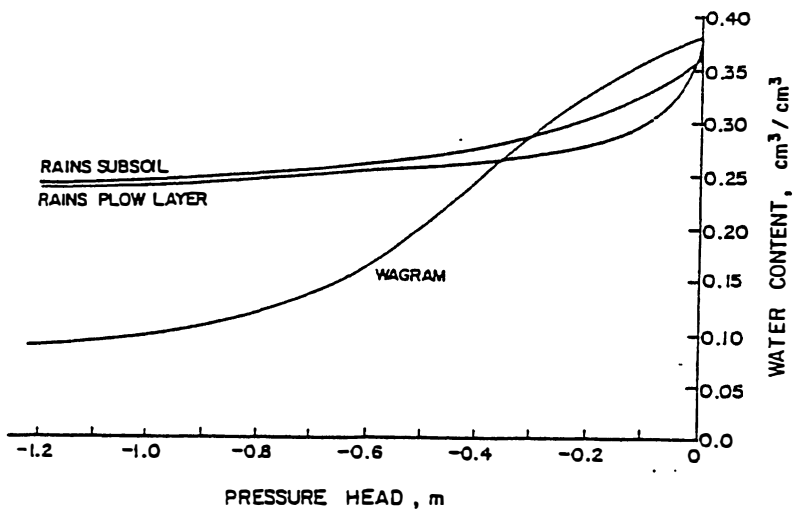

Figure 1.19. Soil water characteristics for the two layers of Rains sandy loam and for Wagram loamy sand.

The drainable porosity, f, may be determined graphically as the slope of the drainage volume-water table depth relationship. Mathematically the drainable porosity may be defined as,

$$\mathbf{f(y)} = \frac{\mathbf{d}}{\mathbf{dy}}[V_d(y)] \tag{1.19}$$

For a constant θ_s and a 'drained to equilibrium' zone above the water table, the shape of the soil water profile is preserved. Raats and Gardner (1974) showed that, for profile preserving flows, $f = \theta_s - \theta_o$, where θ_o is the water content at the surface ($y = 0$). In field

situations θ_s is less than the saturated water content because of air entrapped when the water table rises as discussed previously.

For layered profiles θ_s and $\theta(y)$ are obtained from the soil water characteristics for the respective layers. If the V_d versus y relationships of the soil in the top layer, $V_{d2}(y)$, and in the bottom layer, $V_{d1}(y)$, are first determined from the soil water characteristics, V_d can be easily computed for the layered soil as follows. For water table depths less than the depth, a, of the top layer,

$$V_d(y) = V_{d2}(y) \tag{1.20}$$

For greater depths,

$$V_d(y) = V_{d2}(y) - V_{d2}(y-a) + V_{d1}(y-a) \tag{1.21}$$

When the soil is layered the slope of the V_d versus y relationship, and thus the drainable porosity, will be discontinuous at the depth of the layer interface and equation 1.19 will not be valid at that point. However f can be defined for all the other depths as discussed above.

Drainable porosity is plotted in Figure 1.21 as a function of water table depth for the Rains and Wagram soils. The relationships given in Figures 1.20 and 1.21 are based on the assumptions that the water table is drawn down vertically at a slow rate such that the unsaturated zone stays in hydrostatic equilibrium, and that the soil matrix is rigid and doesn't deform as water is removed. The effect of an elliptical shape drainage profile on drainable porosity was considered by Skaggs et al. (1978). They defined the drainable porosity for two-dimensional water movement as the drainage volume per unit change in the *mean* water table depth. Defining the drainable porosity in this way reduced its dependence on the water table depth, although, in general, f should still be considered a function of depth to the water table.

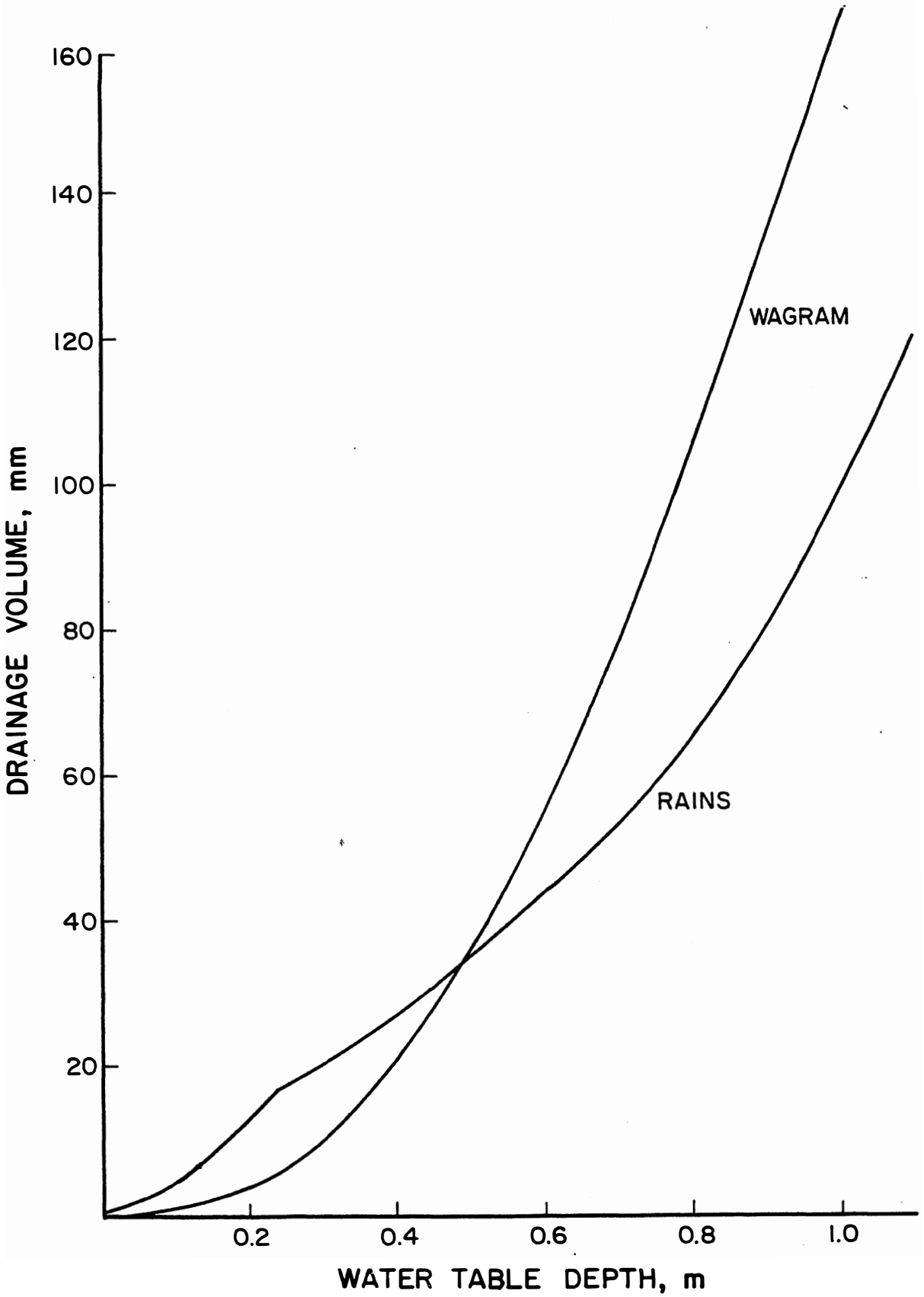

Figure 1.20. **Volume of water drained when the water table is lowered from the soil surface to the indicated depth. The Wagram loamy sand has a uniform profile, while the Rains sandy loam was considered as two layers with the plow layer extending to a depth of 0.25 m.**

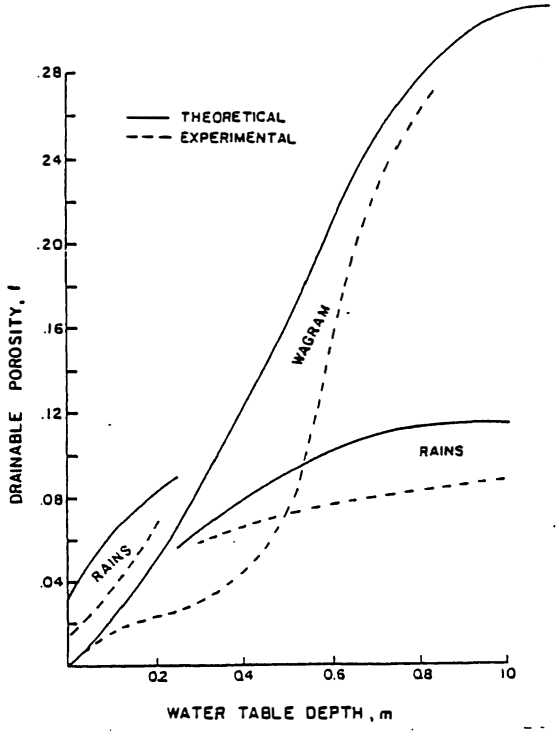

Figure 1.21. Measured and predicted drainable porosities for vertical drainage of Wagram and Rains soils.

REFERENCES

Bouwer, H. 1978 Groundwater Hydrology. McGraw-Hill Book Company, New York, pp. 21-22.

Childs, E. C. 1969. The Physical Basis of Soil Water Phenomena. John Wiley and Sons, New York, London, pp. 115-152.

Childs, E. C. 1960. The non-steady state of the water table in drained land. Journal of Geophysical Research 65:780-782.

Davis, S. N. 1969. Porosity and permeability of natural materials. In Flow Through Porous Media, R. J.M. DeWiest (ed.) Academic Press, New York, pp. 53-59.

Day, P. R., G. H. Bolt and D. M. Anderson. 1967. Nature of Soil Water. In Irrigation of Agricultural Lands, R. M. Hagan et al. (ed.). Agronomy Monograph No. 11, American Society of Agronomy, Madison, WI., pp.

Freeze, A. and J. A. Cherry. 1979. Groundwater. Prentice-Hall, Inc., Englewood Cliffs, NJ. pp. 36-38.

Hillel, D. 1971.

Hoffman, G. J. and G. O. Schwab. 1964. Tile spacing prediction based on drain outflow. TRANSACTIONS of the ASAE 13(4):444-447.

Kirkham, D. and W. L. Powers. 1972. Advanced Soil Physics. Willey-Interscience, New York.

Klute, A. 1986. Water retention. In A. Klute (ed.) Methods of Soil Analysis, Part I, American Society of Agronomy, Madison, WI, pp. 273-278.

Nielsen, D. R., J. W. Biggar and K. T. Erh. 1973. Spatial variability of field measured soil-water properties. hilgardia, Vol. 42(7):215-260.

Raats, P.A.C. and W. R. Gardner. 1974. Movement of water in saturated zone near a water table. Ch. 13 in Drainage for agriculture, J. van Schilfgaarde, Ed., Agronomy Monograph No. 17, American Society of Agronomy, Madison, WI, pp. 331-357.

Skaggs, R. W., L. G. Wells and S. R. Ghate. 1978. Predicted and measured drainable porosities for field soils. TRANSACTIONS of the ASAE 21(3):522-528.

Soil Survey Staff, U.S. Department of Agriculture. 1951. Soil Survey manual. USDA Handbook No. 18, 503 pp.

Tanner, C. B. and D. E. Elrick. 1958. Volumetric porous (pressure) plate apparatus for moisture hysteresis measurements. Soil Science Society of America Proceedings, 22:575-576.

Taylor, G. S. 1960. Drainable porosity evaluation from outflow measurements and its use in drawdown equations. Soil Science 90(6):338-343.

Topp, G. C. and E. E. Miller. 1966. Hysteretic moisture characteristics and hydraulic conductivities for glass-bead media. Soil Science Society of America Proceedings, Vol. 30(2):156-162.

Vomocil, J. A. 1964. Porosity, In Methods of Soil Analysis, Part I, C. A. Black et al. (eds.) Agronomy Monograph No. 9, American Society of Agronomy, Madison, WI, pp. 299-314.

Problems

1.1 The porosity and the specific gravity of the solids of a 100% saturated soil are known. In terms of these quantities and with the aid of a properly drawn sketch, derive a formula for the water content (Dry wt. basis) of soil.

1.2 A sample of silty sand has been excavated from a rolled fill. The sample has a volume of .1 ft.^{3}, a weight of 12.4 lbs and water content (wet weight basis) of 12%. Specific gravity of the solids is 2.65. Find the dry bulk density and the void ratio.

1.3 A sample of moist soil has a volume of 40.5 cc and weighs 59.2 gms. After drying it weighs 48.3 gms. The specific gravity of the solids is 2.68. Find the water content (dry basis), the porosity, and the void ratio.

1.4 Consider a porous material made up of a bundle of 1 cm high capillary tubes of three distinct sizes, $r_1 = 0.015$ cm, $r_2 = 0.003$ cm, and $r_3 = 0.0015$ cm. The total porosity is $P = V_e/V = 0.45$ and there are more tubes with smaller diameters to that $V_1/V = V_2/V = V_3/V = 0.15$, where V_1, V_2, and V_3 are the void volumes corresponding to r_1, r_2, and r_3, respectively. The porous material is placed on a tension table and initially saturated with water as shown schematically below. Then the outlet tube is lowered in steps and the drainage volume measured. Determine the distance h at which each tube size will begin to drain and plot the $\theta(h)$ relationship for this material for both drainage and imbibition. Assume $\sigma = 73$ dynes/cm, and the contact angle $\theta = 0$.

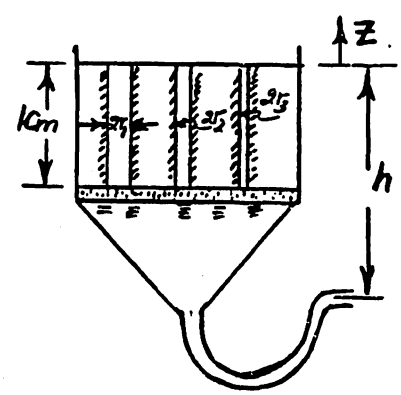

1.5 A porous media is made up of a bundle of capillary tubes as shown below. One third of the total pore volume (P = 0.45) is composed of each of the tubes shown. r_1 = 0.015 cm, r_2 = 0.003 cm, r_3 = 0.0015 cm. Plot both the drainage and imbibition θ(h) relationships for this material, σ = 73 dynes/cm, θ = 0.

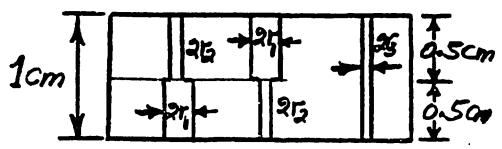

1.6 A sample of Wagram soil with volume V = 100 cm^3 is placed in a pressure plate apparatus and brought to apparent saturation. The following out-flow volumes were measured at equilibrium for the given pressure steps.

air pressure head (cm of water)	0	10	20	30	40	50	60	70	80	100	150	200	500
outflow volume (cm^3)	0	0.3	1.4	3.1	3.6	3.4	3.0	2.2	1.5	1.4	1.6	1.5	2.1

After equilibrium was obtained for h = p/eg = -500 cm the sample was dried and found to have a bulk density of ρ_b = 1.64 gm/cc and a dry weight based water content of $\bar{m}$ = 0.031. Determine the soil water characteristic from these data and plot θ(h).

1.7 A column of the above Wagram soil 100 cm high is initially saturated with the water table at the surface. Then a drain is opened at the bottom of the column and the soil drains to an equilibrium condition. Plot the water content distribution as a function of height θ = θ(z) for the drained case. How much water was removed when the column drained to equilibrium? If the drain was placed 10 cm from the top and the water table lowered to that depth, how much water would be removed? At depths of 25 cm? 50 cm? 75 cm? Plot the volume of water drained at equilibrium versus water table depth for this soil.

1.8 Another soil sample, let's call it soil A, has a soil water characteristic given by the following table.

h	0	-10	-20	-30	-40	-50	-60	-70	-80	-100	-150	-200
θ	0.482	0.444	0.429	0.418	0.410	0.402	0.396	0.392	0.388	0.381	0.372	0.368

A soil column is made up of 50 cm of the Wagram soil over 50 cm of soil A. The

column is initially saturated, then drained to equilibrium with the water table at a 100 cm depth.

Plot the water content distribution after drainage and show schmatically the volume of water drained. Calculate the volume of water drained in cm.

1.9 A sample of the Wagram soil in Problem 1.7 was saturated slowly under suction in the lab and the following soil water characteristic determined.

h	0	-10cm	-20	-30	-40	-50	-60	-70	-80	-100	-150	-200
θ	0.380	0.356	0.325	0.287	0.245	0.205	0.170	0.138	0.120	0.103	0.087	0.072

Rework Problem 1.7 (for drainage to 100 cm depth only) using this soil water characteristic. The h(θ) determinations given in Problem 1.7 had entrapped air in the saturated (h=0) condition. This one did not. Assuming there will be air entrapped in the field, how much error would be caused by using the above θ(h) relationship?

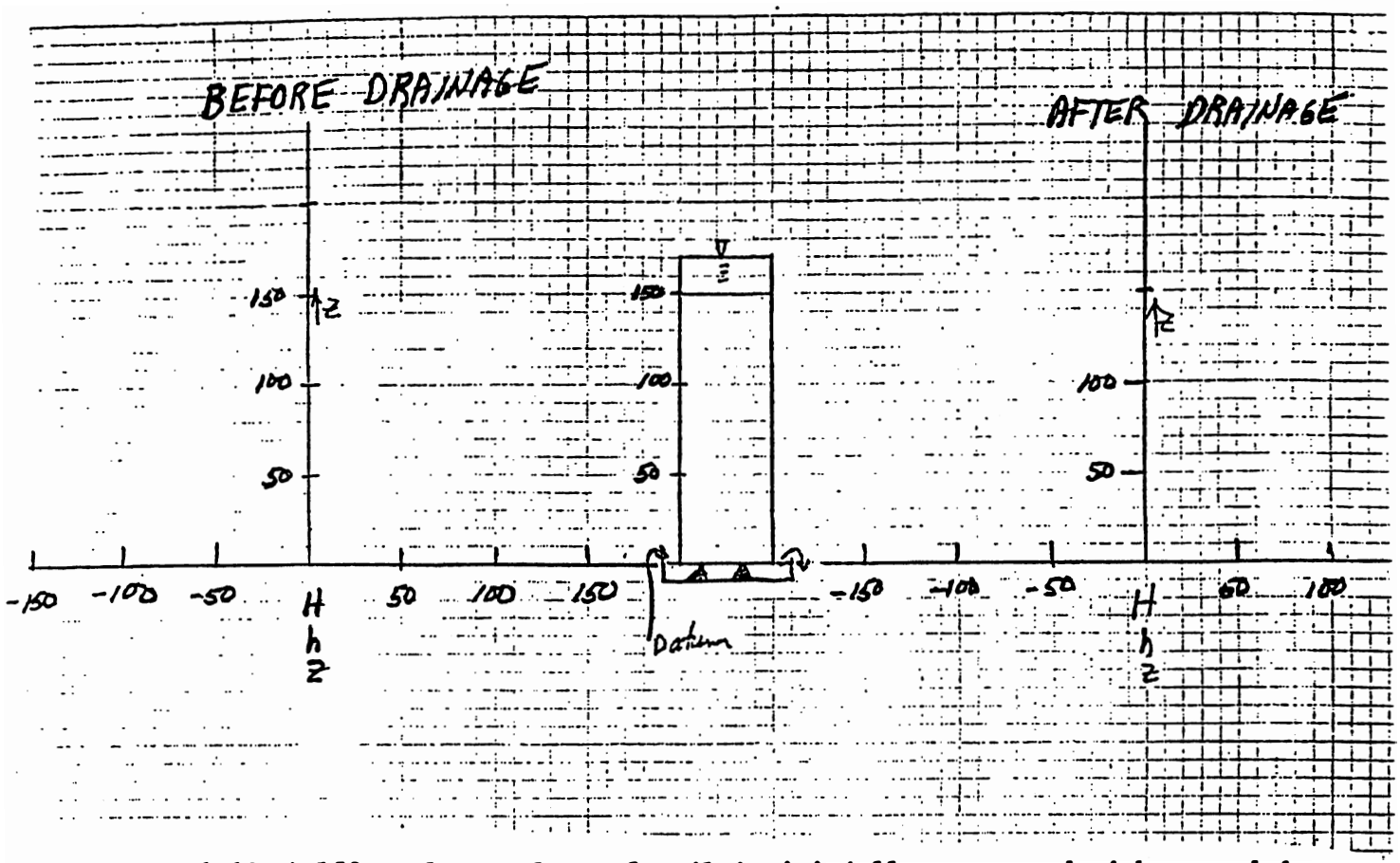

1.10. A 150 cm long column of soil is initially saturated with a ponded depth of 5 cm. (a) Plot hydraulic head, H; pressure head, h; and position head versus distance z from the bottom of the column for this case. Let the datum be at the bottom of the column. (b) Plot the same quantities after the column has drained to equilibrium with the water table at the bottom of the column. The soil water characteristic is given below. (c) How much water drains out when the water table is lowered from z = 150 to z = 0?

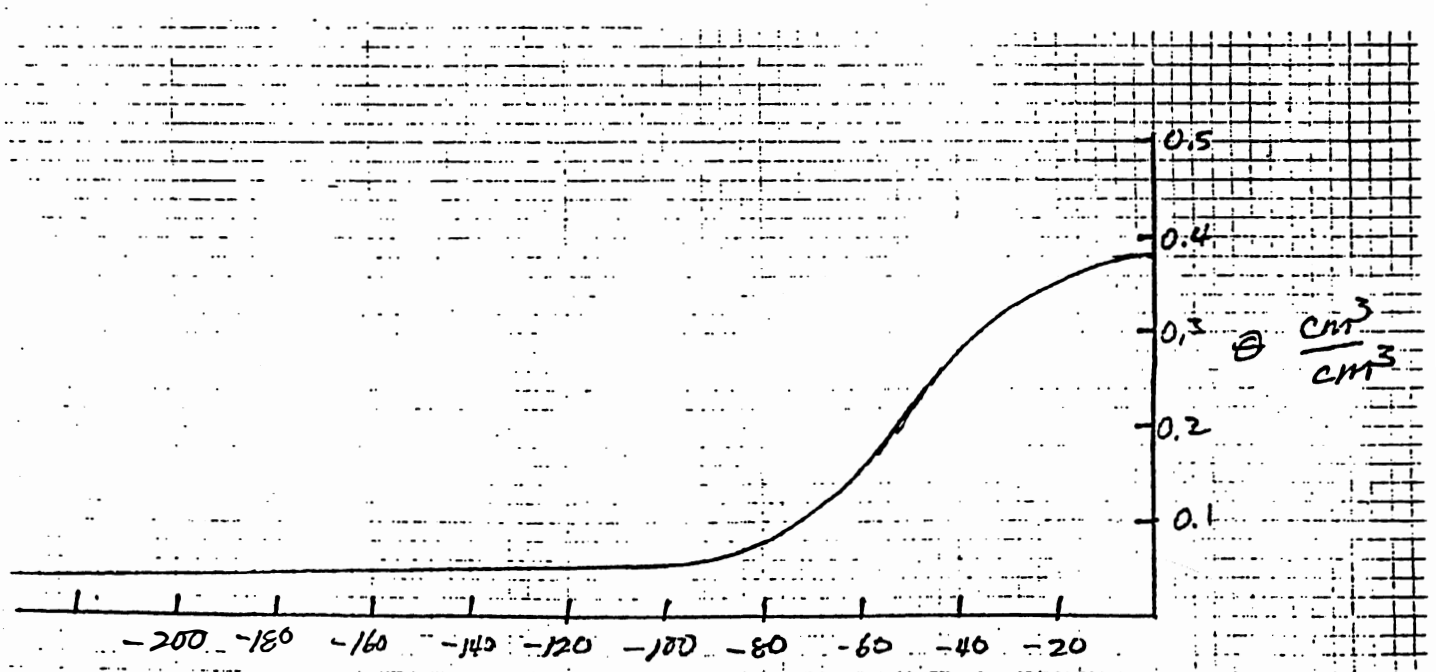

SOIL WATER CHARACTERISTIC

1.11. A 200 cm long soil column (Figure 1) is made up of 100 cm of soil B over 100 cm of soil A. The water table is initially 75 cm from the surface (at z=125 cm) (condition 1) and the column is drained to equilibrium above the water table. Then the outlet tube is lowered to a depth of 175 cm (z=25 cm) (condition 2) and the column is allowed to drain to equilibrium.

a. Plot the hydraulic head, pressure head, and position head on Figure 1 for condition 2 where the water table is 175 cm deep (at z=25 cm).

b. Plot as broken lines the H, h, and z distribution for condition 1 when the water table was 75 cm deep (z=125 cm).

c. Plot the water content distributions for the two cases in Figure 2. The soil water characteristics are given in Figure 3.

d. How much water drains out when the water table is lowered from z=125 to z=25? If the column is a cylinder with diameter 30 cm what is the volume of water drained?

e. What is the drainable porosity when the water table is 175 cm deep (i.e. at z=25 cm)?

1.12. The saturated hydraulic conductivity between points 1 and 2 in Figure 3 is 10 cm/hr. The tensiometer water levels are shown.

a. What is the flux? In which direction?

B. What is K between points 2 and 3?

Note: The flow is vertical and steady

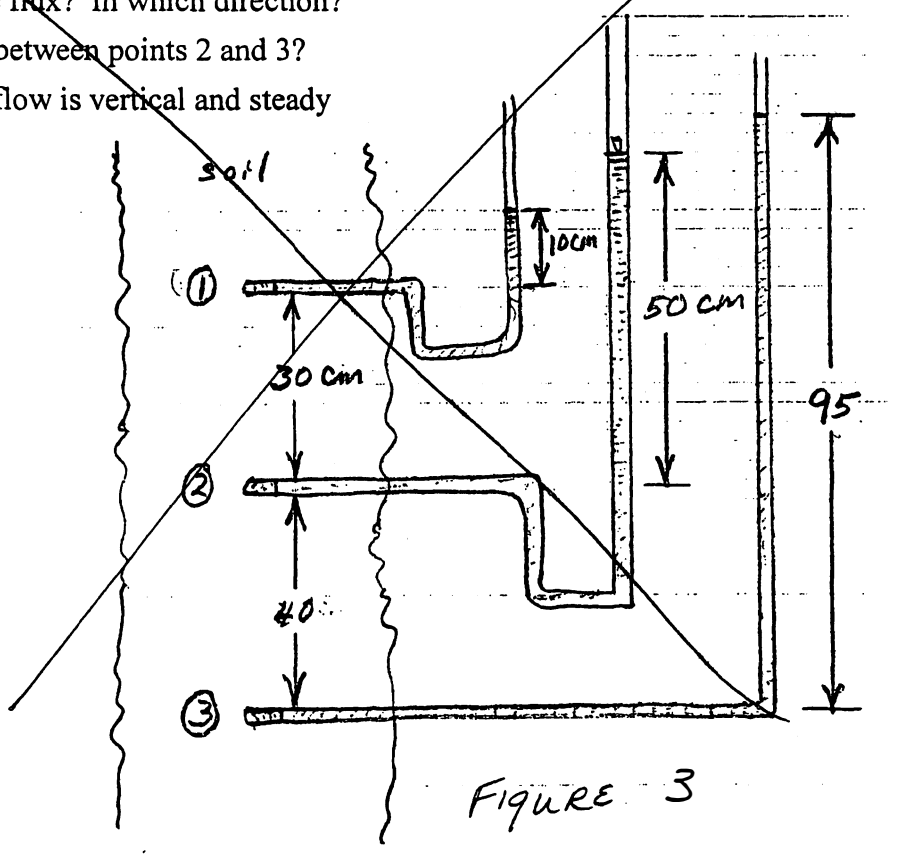

FIGURE 3

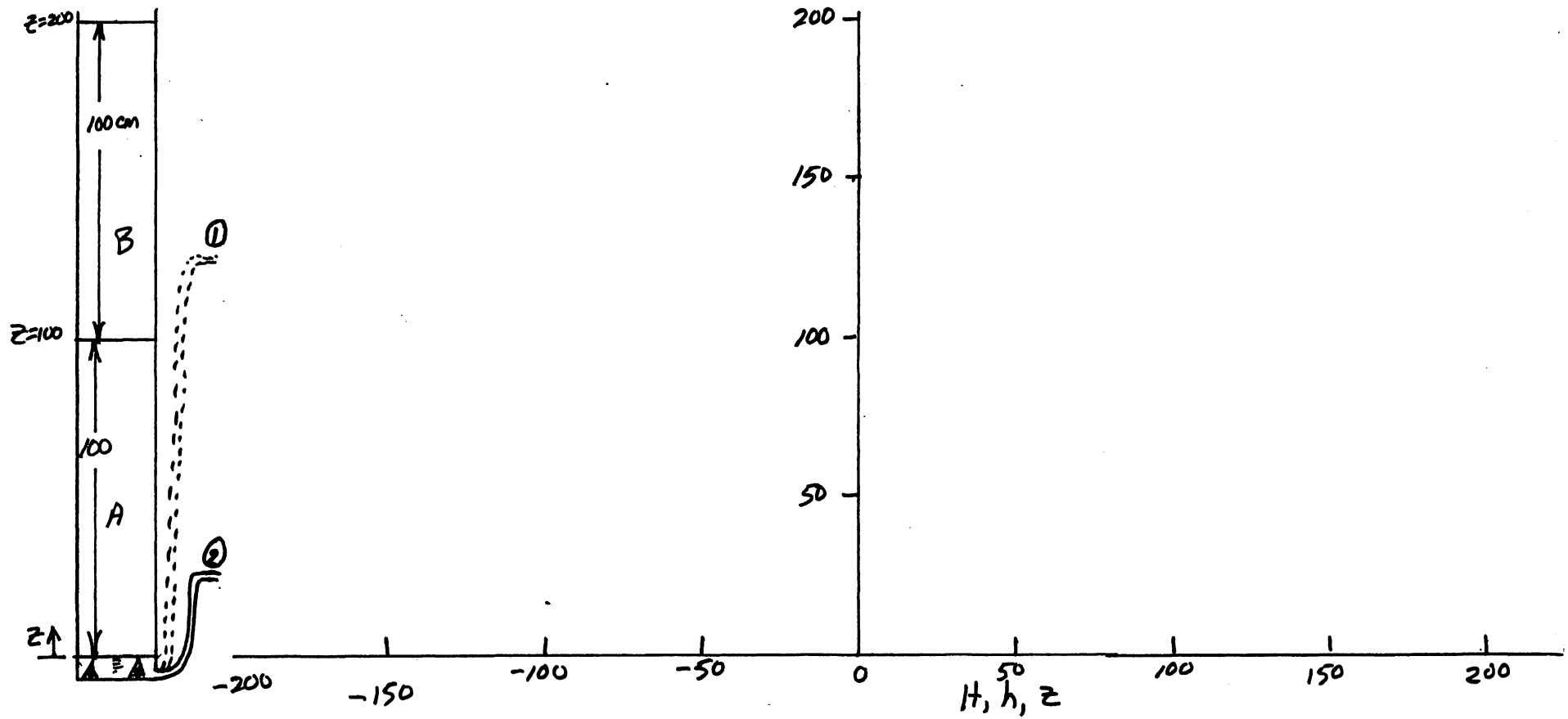
z=200
100 cm
B
①
z=100
100
A
②
z
200
150
100
50
-200
-150
-100
-50
0
50
100
150
200
H, h, z

Figure 1

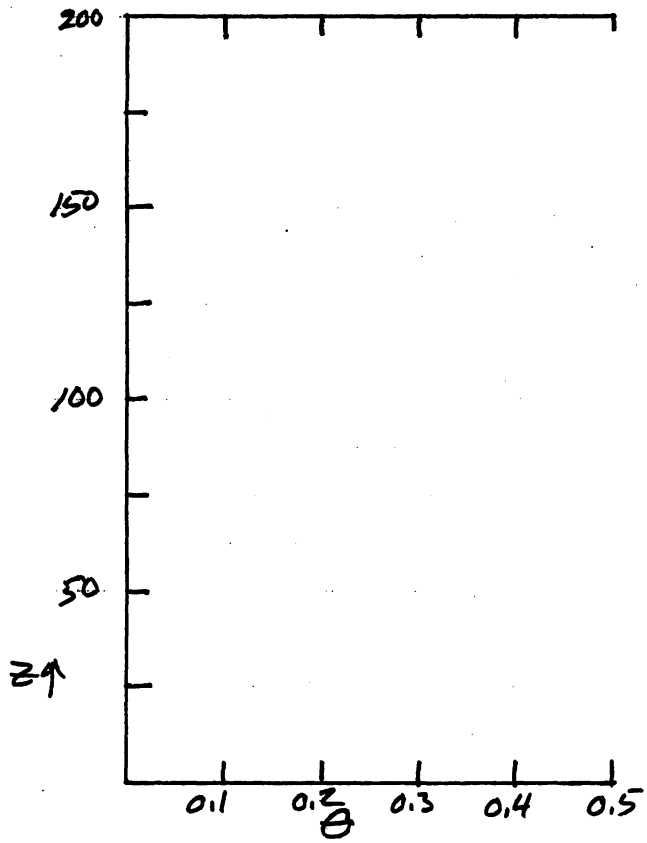

Figure 2

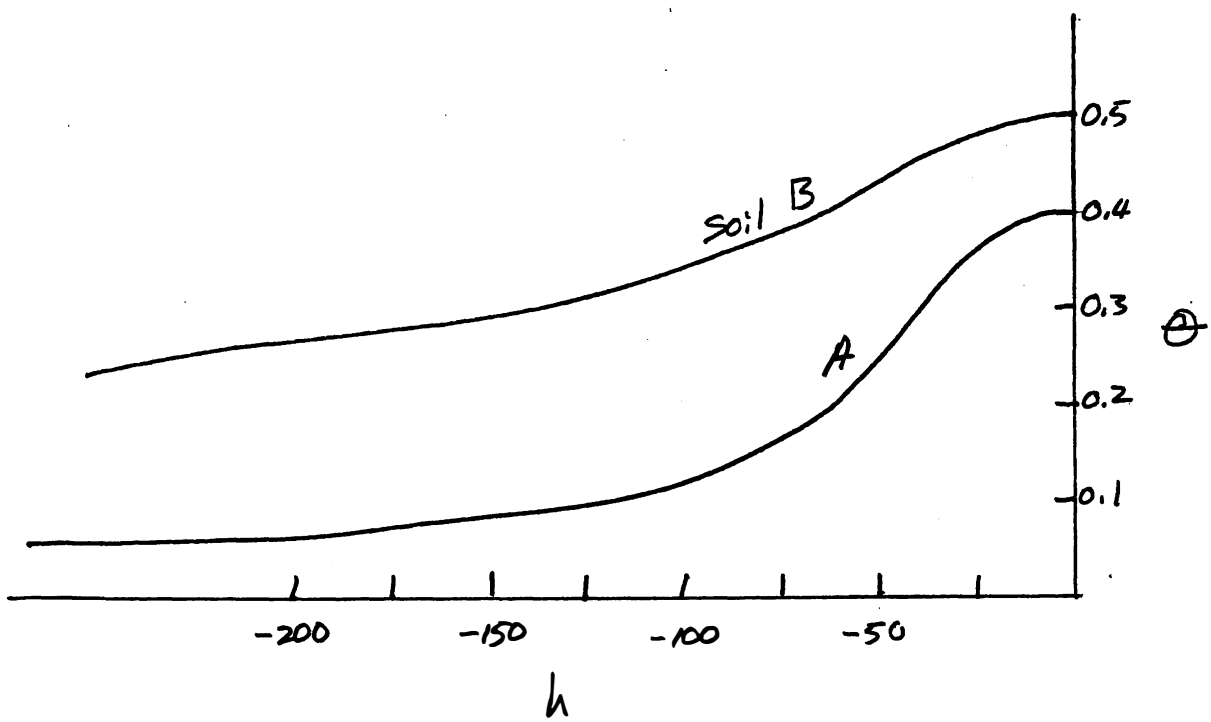

Figure 3. Soil water characteristics.

CHAPTER 2

Water Movement in Soil

Chapter 2

WATER MOVEMENT IN SOIL

2.1 Darcy's Law

The principle relationship used to describe the flow of liquid in porous materials was derived from results of experiments by Darcy in 1856. He found that the flowrate of water through sand beds of different thicknesses was proportional to the hydraulic gradient. Darcy's law is illustrated by Figure 2-1 and may be written as,

$$Q = KA \frac{H_1 - H_2}{L} \tag{2.1}$$

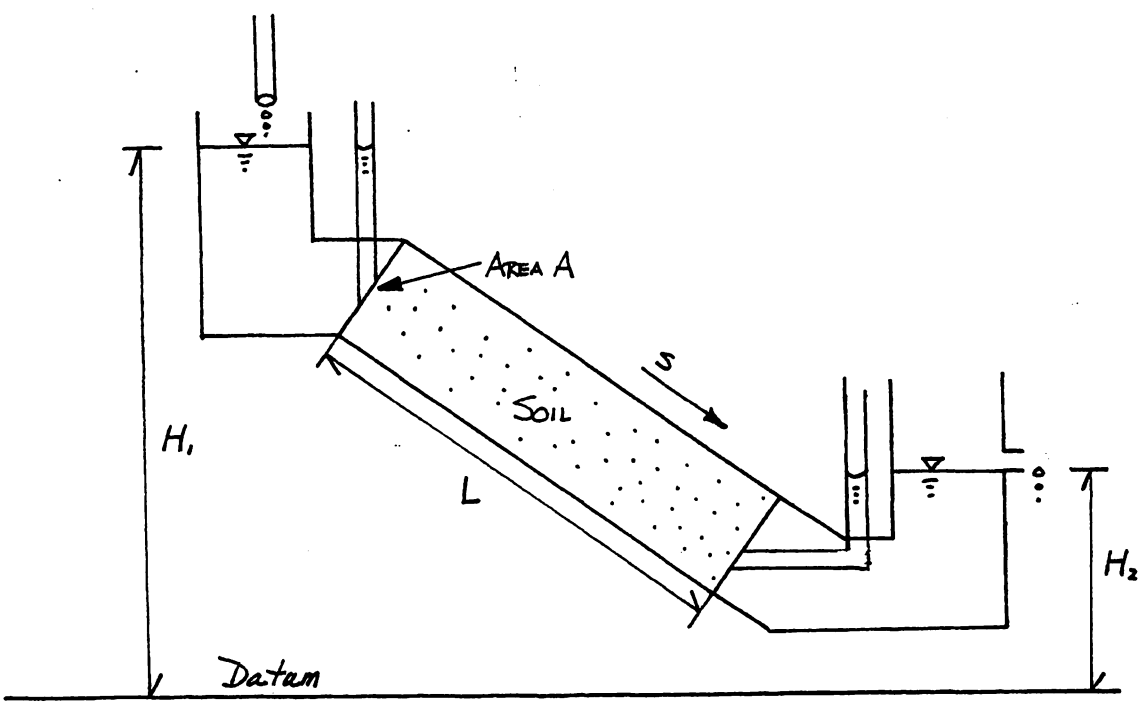

Figure 2-1. Illustration of Darcy's law for flow in a soil column.

Where Q is flowrate through the soil column (cm^3/hr), A is the cross-sectional area, L is the column length in the direction of flow, H_1 and H_2 are the hydraulic heads at the ends of the

column, and K is the proportionality constant which is termed the hydraulic conductivity or permeability. Equation 2.1 may be written as,

$$q = \frac{Q}{A} = K\,\frac{H_1 - H_2}{L} = -\,K\,\frac{\Delta H}{L} \tag{2.2}$$

where q is defined as the soil water flux and has units of velocity (e.g. cm/hr). The flux is also sometimes called the discharge velocity and is equal to the flowrate per unit area of soil. Note this is <u>not</u> equal to the velocity in individual pores but is defined as the flowrate per unit area.

The flux may be defined in terms of the hydraulic gradient at a point as,

$$q = -K\frac{dH}{ds} \tag{2.3}$$

where s is distance in the direction of flow and the negative sign indicates that flow is in the direction of decreasing hydraulic head. In general flux should be regarded as a vector quantity having both magnitude and direction. Then equation 2.3 would be more correctly written

$$q_s = -K\frac{dH}{ds} \tag{2.4}$$

for flow in three dimensions, $\mathbf{q} = q_x\mathbf{i} + q_y\mathbf{j} + q_z\mathbf{k}$ (2.5)

and Darcy's law may be written $\mathbf{q} = \mathbf{K}\nabla\mathbf{H}$ (2.6)

$$\bar{q} = -K[\frac{\partial H}{\partial x}\bar{i} + \frac{\partial H}{\partial y}\bar{j} + \frac{\partial H}{\partial z}\bar{k}] \tag{2.7}$$

where $\bar{i}$, $\bar{j}$ and $\bar{k}$ are unit vectors in the x,y, and z directions.

2.2. <u>Flux, Point Velocity, and Seepage Velocity</u>

Flux is defined in equation 2.3 and 2.4 from the macroscopic point of view. Conceptually, flux, or discharge velocity, can be related to the actual or microscopic velocity in a porous media in the following way. Let the actual velocity be represented by U(x,y,z,t) where x,y,z are position coordinates and t is time. Then the component of flux in the s direction, q_s, may be defined as

$$q_s\ (x_o,y_o,z_o) = \frac{1}{A} \int_A\!\!\int U_s(x,y,z,t)dA \tag{2.8}$$

where A is the area of a circle oriented perpendicular to the s direction centered at x_o, y_o, z_o (Figure 2-2), the size of the circle being small with respect to the total flow area but large with respect to the size of the pores and solid particles, and $U_s(x,y,z,t)$ is the actual velocity in the s direction at point x,y,z,t. Then by moving A around the flow domain the flux can be defined at all points in the flow domain.

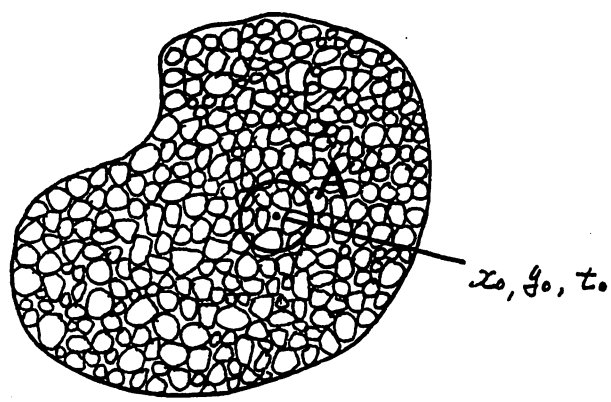

Figure 2-2. Schematic of flow cross-section for defining flux in terms of microscopic velocity.

The seepage velocity, or velocity of advance, V, is defined as the average velocity in the pores and is higher than the flux. The relationship between seepage velocity and flux can be defined by considering a column of length, L, and cross-sectional area, A. Let A_p be the cross-section area of the pores at any position, z, along the column, $A_p = A_p(z)$. Define $M = M(z) = A_p(z)/A$.

From continuity $\quad Q = qA = \overline{V}\,\overline{A_p} \quad so \quad \overline{V} = q\frac{A}{\overline{A_p}}$

where A_p is the average area of pores,

$$\overline{A_p} = \frac{1}{L}\int_{z=o}^{L} A_p(z)dz = \frac{V_p}{L}$$

where V_p is the total volume of pores. Then,

$$\frac{\overline{A_p}}{A} = \frac{V_p}{LA} = \frac{V_p}{V_t} = n \text{ , the total porosity, and } \overline{V} = \frac{q}{n} \tag{2.9}$$

2.3. Derivation of Darcy's Law - Capillary Tube Analogy

Although Darcy's Law was developed from experimental studies, it may be deduced from the Nayier-Stokes equations which describe the movement of a viscous fluid in general space with unspecified boundary conditions (c.f. Childs, 1969, Note 17). In this section we apply the basic concepts of fluid mechanics to derive equations governing the flow of liquids in small closed channels, and compare these equations with Darcy's Law. Consider the steady flow of a liquid in a uniform tube as shown in Figure 2-3.

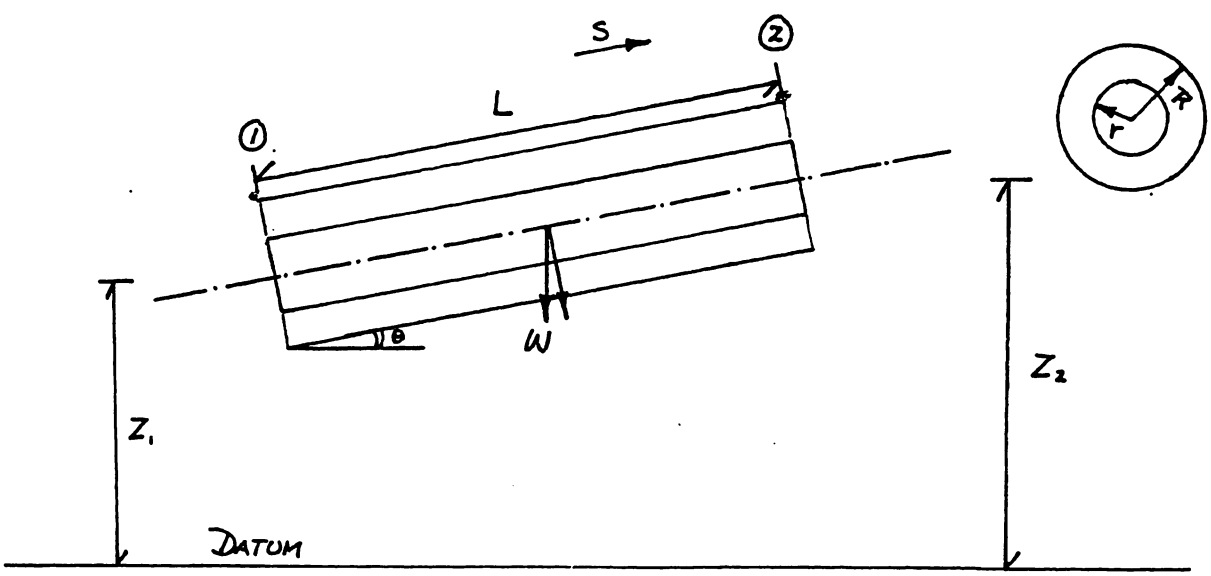

Figure 2-3. Laminar flow of liquid in a tube.

Applying Newton's second law to the small cylindrical section of radius r and length L gives

$$\sum \mathbf{F_s} = \mathbf{ma_s}$$

since the flow is steady and the cross-section uniform, acceleration, a_s=0, and

$$\sum \mathbf{F_s} = \mathbf{0}$$

The forces acting in the s direction are the pressure forces at the ends of the section, the s component of the weight, W, and frictional or drag forces acting along the sides. Therefore

$$\sum \mathbf{F_s} = (\mathbf{p_1} - \mathbf{p_2})\ \pi \mathbf{r}^2 - \mathbf{W} \sin \theta + \tau 2\pi \mathbf{rL} = \mathbf{0} \qquad (2.10)$$

$$\tau = \mu \frac{dV}{dr} \qquad (2.11)$$

where p_1 and p_2 are the pressure at points 1 and 2, and τ is the shear force acting at the sides of the section. Assuming laminar flow, τ can be determined from Newton's law of viscosity as,

$$\mathbf{W} = \rho g \pi \mathbf{r}^2 \mathbf{L} \qquad (2.12)$$

substituting $\text{Sin}\theta = \dfrac{Z_2 - Z_1}{L}$, (2.11) and (2.12) into (2.10) and rearranging yields

$$\frac{dV}{dr} = [p_2 - p_1 + \rho g(Z_2 - Z_1)\ r]/2L\mu \qquad (2.13)$$

Further rearranging the numerator gives,

$$\frac{dV}{dr} = \left[\left(\frac{p_2}{\rho g} + z_2\right) - \left(\frac{p_1}{\rho g} + z_1\right)\right] \frac{\rho g r}{2L\mu}$$

or

$$\frac{dV}{dr} = (H_2 - H_1)\ \frac{\rho g r}{2L\mu} = \frac{\Delta H \rho g r}{2L\mu} \qquad (2.14)$$

Multiplying both sides of (2.14) by dr and integrating using the condition that V=0 at r=R gives,

$$V = \frac{\rho g \Delta H}{4\mu L}(r^2 - R^2) \tag{2.15}$$

Thus, the velocity profile for laminar flow in a tube is parabolic with maximum velocity at the center, r=0. Note that $\Delta H = H_2 - H_1$ is negative for flow in the +s direction.

The flow rate Q may be obtained from (2.15) as follows

$dQ = VdA = V2\pi rdr$

$$Q = \int_{r=0}^{R} V2\pi r dr$$

Substitution of (2.15) and integration yields Poiseuille's equation,

$$Q = -\frac{\pi R^4 \rho g}{8\mu} \cdot \frac{\Delta H}{L} \tag{2.16}$$

then

$$q = \frac{Q}{A} = -\frac{R^2 \rho g}{8\mu} \frac{\Delta H}{L} \tag{2.17}$$

which is directly analogous to Darcy's law, equation 2.3, where the effective hydraulic conductivity of the tube is $K = \frac{R^2 \rho g}{8\mu}$. Notice that K is dependent on both the properties of the material (R^2) and the fluid ($\rho g/\mu$).

2.4. Validity of Darcy's Law

Darcy's Law is usually assumed to be valid as long as laminar flow conditions exist. This is consistent with our capillary tube analogy where laminar flow was assumed in the derivation of (2.17). Harr (1962) states that Darcy's law may be assumed valid when the

Reynolds number $\mathbf{Re} = \frac{q\rho D}{\mu} < 1$, where D is the equivalent particle diameter for the media. Since Re = 1 is the critical Reynolds number for flow about a sphere, this condition would correspond to the transition between laminar and turbulent flow. Childs (1969) cited work by Faucher, et al., that showed Darcy's law may not be safely applied for Re>1. For higher q values (and therefore higher Re) there will be a less than proportional increase in q with increase in the hydraulic gradient as shown in Figure 2-4. This infrequently happens for water movement in soil but may occur in drain envelopes or in the toe drain of a dam where large particle sizes exist.

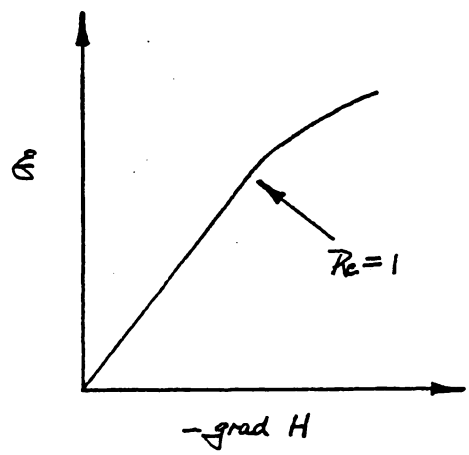

Figure 2-4. Non-proportional relationship between flux and hydraulic gradient for large R_e.

The failure of Darcy's law for small hydraulic gradients has been discussed by Swartzendruber (1963). He found that for some cases the flux could be more accurately expressed as,

$$\mathbf{q = B[I-J(1-e^{-CI})]} \tag{2.18}$$

where q is flux, I is hydraulic gradient, dH/ds, and B, J and C are constants depending on the soil.

2.5. Intrinsic Permeability

As demonstrated above for liquid flow in a capillary tube, the hydraulic conductivity is dependent on both properties of the porous media and on properties of the fluid. In order to separate these effects and define a property that depends on the media or soil matrix alone, the intrinsic permeability or simply, permeability, k, is defined by,

$$K = \frac{\rho g k}{\mu} \tag{2.19}$$

Equation (2.19) can be used to estimate the conductivity of a porous media for a given fluid from the known conductivity for another fluid. However, as pointed out by Childs (1969) "it is hazardous in the extreme to suppose that one can change to a different fluid without causing more or less profound changes in the internal pore geometry of the soil." The hydraulic conductivity is in fact dependent on interaction between the soil matrix and the flowing fluid so equation (2.19) will serve only as a means of approximating the change in K with a change in the fluid. Perhaps the most useful application of (2.19) is to estimate changes in the hydraulic conductivity due to temperature which has a known effect on μ and ρ.

Then for the capillary tube,

$$K = \frac{R^2 e g}{8\mu}$$

so

$$k = \frac{R^2}{8}$$

2.6. Anisotropy

Thus far we have assumed that the hydraulic conductivity is independent of the direction of the flux. Such a soil is said to be isotropic. Further, if the hydraulic conductivity is independent of both direction of flux and location in the soil, it is said to be homogeneous and isotropic. If the conductivity is the same at all points in the flow domain but is dependent on the direction of flux, it is homogeneous and anisotropic. In

homogeneous, anisotropic soils the hydraulic conductivity is dependent on the flux direction, but this directional dependence is independent of its position in space.

Harr (1962) notes that most soils are anisotropic to some degree. Sedimentary soils may exhibit thin alternating layers of varying conductivity. Generally the hydraulic conductivity in homogenous natural deposits is higher in the horizontal direction than in the vertical direction. However some agricultural soils develop massive columnar structure resulting in vertical channels and higher vertical conductivity than horizontal. Root channels, worm holes and other biological activity may also cause the same effect.

It is obvious that some modifications must be made to use Darcy's law for anisotropic materials. Childs (1969) presents a simple yet elegant explanation of the use of Darcy's law for anisotropic soils. See this reference for a more complete discussion of anisotropy. Childs used the capillary tube analogy to show that a gradient in the x direction may affect flux in the y or z directions. For an anisotropic soil, the x,y and z flux components may be expressed as follows:

$$\mathbf{q_x = -K_{xx}\, dH/dx - K_{xy}\, dH/dy - K_{xz} dH/dz,}$$

$$\mathbf{q_y = -K_{yx}\, dH/dx - K_{yy}\, dH/dy - K_{yz} dH/dz,}$$

$$\mathbf{q_z = -K_{zy}\, dH/dx - K_{zy}\, dH/dy - K_{zz} dH/dz.} \qquad (2.20)$$

And as in equation (2.5),

$$\mathbf{q = q_x\, i + q_y\, j + q_z\, k}$$

Darcy's law for anisotropic materials can be more conveniently written as,

$$\mathbf{q = -\underline{K} \bullet \nabla H} \qquad (2.22)$$

where $\underline{\mathbf{K}}$ is a tensor and may be written,

$$\underline{\mathbf{K}} = \begin{vmatrix} K_{xx} & K_{xy} & K_{xz} \\ K_{yx} & K_{yy} & K_{yz} \\ K_{zx} & K_{zy} & K_{zz} \end{vmatrix}$$

The dot product of the tensor $\underline{\mathbf{K}}$ and the vector $\nabla\mathbf{H}$ is the vector $\mathbf{q}$. The component $K_{\ell m}$ may be interpreted as the coefficient that when multiplied by the component $\partial H/\partial m$ of the hydraulic gradient will give the contribution of the gradient in the m direction to the flux in the ℓ direction. Bear (1972) indicates that $\underline{\mathbf{K}}$ is symmetrical so that $K_{\ell m} = K_{m\ell}$ and only 6 rather than 9 different components are required. Fortunately, we think that many agricultural

soils have principle axes in the x,y, and z directions so that $k_{\ell m} = 0$ for $\ell \neq m$; all terms except the diagonals in (2.22) are zero, and

$$\bar{q} = -K_{xx}\frac{\partial H}{\partial x}\,\bar{i} - K_{yy}\,\frac{\partial H}{\partial y}\,\bar{j} - K_{zz}\,\frac{\partial H}{\partial z}\,\bar{K} \tag{2.23}$$

2.7. Flow in Unsaturated or Partially Saturated Soil

The equation for flux in an unsaturated or partially saturated soil has the same form as Darcy's equation and may be written,

$$q_s = -K(\theta)\,\frac{\partial H}{\partial s} \tag{2.24}$$

where the hydraulic conductivity is a function of the water content, θ. Since the relationship $\theta = \theta(h)$ is a property of the soil (albeit also dependent on the wetting and drying history due to hystersis), for soil water systems exposed to the atmosphere, we may write $h = h(\theta)$, and therefore $K = K(h)$. Then

$$q_s = -K(h)\,\frac{dH}{ds} \tag{2.25}$$

Recall that $H = h + z$ where z is the vertical distance above the datum. Then for flow in the horizontal direction, x,

$$q_x = -K(h)\frac{dh}{dx} \tag{2.26}$$

and for vertical flow

$$q_z = -K(h)\,\frac{d}{dz}\,(h + z),$$

$$q_z = -K(h)\,\frac{dh}{dz} - K(h) \tag{2.27}$$

We may also write $\frac{dh}{ds} = \frac{dh}{d\theta}\frac{d\theta}{ds}$, where $\frac{dh}{d\theta}$ can be evaluated from the soil water characteristic and is itself a function of θ. Then we can write equation (2.26) as:

$$q_x = -K(\theta)\frac{dh}{d\theta}\frac{d\theta}{dx},$$

or

$$q_x = D(\theta)\frac{d\theta}{dx} \tag{2.28}$$

where $D(\theta) \equiv K(\theta)\frac{dh}{d\theta}$ is defined as the soil water diffusivity having units of L^2/T (e.g. cm^2/hr). Likewise equation (2.27) may be written:

$$q_z = -D(\theta)\frac{d\theta}{dz} - K(\theta) \tag{2.29}$$

For unsaturated soils the water moves primarily through films located around and between solid particles. As the water content decreases, the cross-sectional area of the films also decreases and the flow paths become more limited. The result is a hydraulic conductivity function that decreases rapidly with water content a shown in Figure 2-5a. In most cases hysteresis in the $K(\theta)$ relationship is small. However, when $K = K(h)$ is used as in Equation (2.25), hysteresis may be quite pronounced due to hysteresis in the $h(\theta)$ relationship (Figure 2-5b). There is some advantage in expressing the flux in terms of the water content gradient (Equations (2.28) and (2.29)) in that $D(\theta)$ varies over a smaller range and is less nonlinear than the corresponding $K(\theta)$ (Figure 2-5c). Note, however, that $d\theta/dh = 0$ for $h > 0$, and $D(\theta)$ is not defined for positive pressure heads. Therefore, these equations cannot be used for saturated flow or for combined saturated-unsaturated flow.

Swartzendruber (1966) noted that the essence of the development of equations for unsaturated flow (Equations (2.24) through (2.29) was originally set forth by Buckingham (1907) and suggests that they be called the Buckingham-Darcy equations to reflect their historical origins.

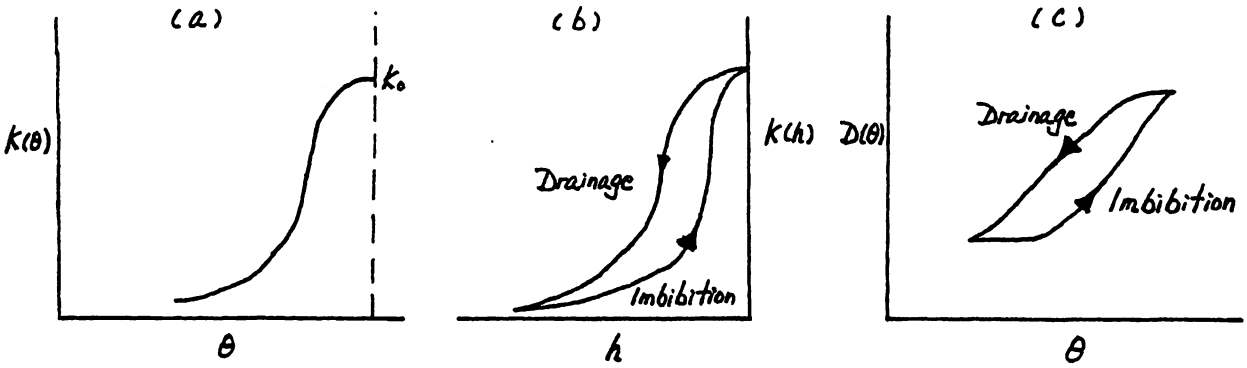

Figure 2-5. Schematic of the K(θ), K(h), and D(θ) relationships for soil. Hysteresis is exhibited by the K(h) and D(θ) functions.

2.8. Equation of Continuity

One of the basic relationships for flow of water in soil, and for the fluid mechanics in general, is the principle of conservation of mass. For any specified volume, V, in the flow domain the principle of conservation of mass may be written as in equation (2.30). Consider the special case of flow in one direction only (Figure 2-6). At any time the total mass in the incremental volume of length Δx and cross-sectional area A is ρθV where

$$\begin{Bmatrix}\textbf{Rate mass is}\\ \textbf{stored in V}\end{Bmatrix} = \begin{Bmatrix}\textbf{Rate Mass}\\ \textbf{enters V}\end{Bmatrix} - \begin{Bmatrix}\textbf{Rate mass}\\ \textbf{leaves V}\end{Bmatrix} \tag{2.30}$$

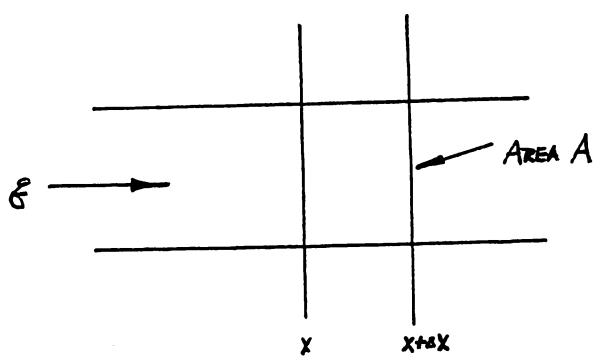

Figure 2-6. Flow in one dimension only.

$V = A\Delta x$. Therefore the rate mass is stored is $\frac{\partial \rho\theta V}{\partial t}$ Mass enters the volume at a rate of $Aq\rho|_x$ and leaves at a rate of $Aq\rho|_{x+\Delta x}$.

$$\frac{\Delta \rho\theta V}{\Delta t} = Aq\rho|_x - Aq\rho|_{x+\Delta x}$$

But $V = A\Delta x$ and the density may be assumed constant, so dividing both sides by $A\rho\Delta x$, the above equation may be written as,

$$\frac{\partial\theta}{\partial t} = \frac{q|_x - q|_{x+\Delta x}}{\Delta x}$$

Let $\Delta x \rightarrow 0$ and the right side is $-\frac{\partial q}{\partial x}$. Therefore for flow in the x direction only

$$\frac{\partial\theta}{\partial t} = \frac{\partial q}{\partial x} \tag{2.31}$$

The continuity equation for three dimensions can be derived by extending the above to an incremental volume with sides Δx, Δy, and Δz (see Problem 2-2).

A general form of the continuity equation may be derived for an arbitrary control volume, V, by employing the divergence theorm. Referring to Figure 2-7,

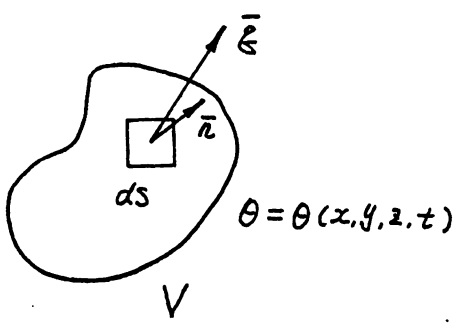

Figure 2-7. Arbitrary control volume in a three dimensional flow field.

the total mass in the control volume at any time is,

$$\iiint_{\mathbf{V}} \rho\theta \, \mathbf{dV}$$

and the rate of mass stored is therefore

$$\frac{d}{dt}\iiint \rho\theta \; dV \tag{2.32}$$

For a fixed volume

$$\frac{d}{dt} \iiint \rho\theta \; dV = \iiint \frac{\partial}{\partial t} \; \rho\theta dV$$

Note also that the net rate that mass enters V through any incremental surface area, ds, may be written as,

$$- \rho \, q \cdot \mathbf{n} \, ds$$

where n is a unit vector perpendicular to the surface at all points on the outside surface of V. Then the net rate mass enters V is $\iint$-**q**.**n** ρds

and

$$\iiint_V \frac{\partial}{\partial t} \rho\theta dV = -\iint_S \rho \; \bar{q} \cdot \bar{n} \; ds \tag{2.34}$$

From the divergence theorm

$$\iint_s \rho \; q \cdot n \; ds = \iiint_V \nabla \cdot \rho q \; dV$$

where, for rectangular coordinates, ∇ represents the operator $\frac{\partial}{\partial x} \bar{i} + \frac{\partial}{\partial y} \bar{j} + \frac{\partial}{\partial z} \bar{k}.$.

Substituting into (2.34) and re-arranging we get

$$\iiint_V \left[\frac{\partial(\rho\theta)}{\partial t} + \nabla \cdot \rho\bar{q} \right] dV = 0 \tag{2.35}$$

Because V is arbitrary, the only way (2.35) can hold is,

$$\frac{\partial(\rho\theta)}{\partial t} + \nabla \cdot \rho\bar{q} = 0$$

Assuming the density of water, ρ, constant we get

$$\frac{\partial\theta}{\partial t} = - \nabla \cdot \bar{q} \tag{2.36}$$

Equation (2.36) is a general form of the continuity equation and for rectangular coordinates may be written as,

$$\frac{\partial\theta}{\partial t} = -\frac{\partial q_x}{\partial x} - \frac{\partial q_y}{\partial y} - \frac{\partial q_z}{\partial z}$$

$$\frac{\partial\theta}{\partial t} = - \nabla \cdot \bar{q}$$

2.9. Flow Equations

The governing differential equations for flow in both saturated and unsaturated soils may be obtained by substituting the expression for flux into the continuity equation (2.35). For the general case of anisotropic unsaturated flow we may write

$$\frac{\partial\theta}{\partial t} = - \nabla \cdot [\, \underline{K}(\theta) \cdot \nabla H \,] \tag{2.37}$$

where $\underline{K}(\theta)$ is the hydraulic conductivity tensor for unsaturated conditions. If the principle axes of the conductivity tensor are aligned in the x,y, and z directions $K_{\ell m} = 0$ for $\ell \neq m$, and equation (2.37) may be expanded to

$$\frac{\partial\theta}{\partial t} = \frac{\partial}{\partial x}\left[K_{xx}(\theta)\ \frac{\partial H}{\partial x}\right] + \frac{\partial}{\partial y}\left[K_{yy}(\theta)\ \frac{\partial H}{\partial y}\right] + \frac{\partial}{\partial z}\left[K_{zz}(\theta)\ \frac{\partial H}{\partial z}\right] \qquad (2.38)$$

Recall that H = h + z. Then for isotropic conditions equation (2.38) may be written as

$$\frac{\partial\theta}{\partial t} = \frac{\partial}{\partial x}\left[K(\theta)\ \frac{\partial h}{\partial x}\right] + \frac{\partial}{\partial y}\left[K(\theta)\ \frac{\partial h}{\partial y}\right] + \frac{\partial}{\partial z}\left[K(\theta)\ \frac{\partial h}{\partial z}\right] + \frac{\partial K(\theta)}{\partial z} \qquad (2.39)$$

From the soil water characteristic, $\theta = \theta(h)$ or $h = h(\theta)$ is known so we can write (2.39) in terms of a single dependent variable, either θ or h.

$$\frac{\partial\theta}{\partial t} = \frac{d\theta}{dh}\ \frac{\partial h}{\partial t} = C(h)\frac{\partial h}{\partial t}$$

where

$C(h) = \dfrac{d\theta}{dh}$ is a function of h and is called the soil water capacity. Then equation (2.39) may be written

$$C(h)\ \frac{\partial h}{\partial t} = \frac{\partial}{\partial x}\left[K(h)\ \frac{\partial h}{\partial x}\right] + \frac{\partial}{\partial y}\left[K(h)\ \frac{\partial h}{\partial y}\right] + \frac{\partial}{\partial z}\left[K(h)\ \frac{\partial h}{\partial z}\right] + \frac{\partial k(h)}{\partial z}$$

(2.40)

Equation (2.39) may be written with θ as the dependent variable by using the soil water diffusivity as defined in Section 2.7. Thus,

$$\frac{\partial\theta}{\partial t} = \frac{\partial}{\partial x}\left[D(\theta)\ \frac{\partial\theta}{\partial x}\right] + \frac{\partial}{\partial y}\left[D(\theta)\frac{\partial\theta}{\partial y}\right] + \frac{\partial}{\partial z}\left[D(\theta)\ \frac{\partial\theta}{\partial z}\right] + \frac{\partial K(\theta)}{\partial z}$$

(2.41)

Equations (2.39), (2.40), and (2.41) are forms of Richards equation (Swartzendruber, 1969). Equation (2.41) has certain advantages over other forms of the Richards equation for some applications. As noted in Section 2-7, $D(\theta)$ has a smaller variation from "wet" to "dry" conditions for most soils, than does C(h) and K(h). Therefore equation (2.41) is "less nonlinear" and somewhat easier to solve numerically than (2.40). Further, for horizontal flow only, the last two terms in (2.41) fall out and only one soil property, $D(\theta)$, is needed for

solving the equation as opposed to both C(h) and K(h) for equation (2.40). The big disadvantage of (2.41) is that it is <u>not</u> valid for $h > 0$ (saturated flow) because $D(\theta)$ is undefined. Thus (2.41) cannot be used for situations where part of the flow domain is saturated. Since both saturated and unsaturated flow are involved in most drainage situations, equation (2.40) is the form of the Richards equation normally used for drainage.

When the flow domain is saturated, or apparently saturated as discussed in section 1-3, $\partial\theta/\partial t = 0$ and the hydraulic conductivity is no longer a function of θ or h. Then the governing equation for homogeneous anisotropic soils may be written as,

$$\nabla \cdot \underline{\mathbf{K}} \cdot \nabla \mathbf{H} = \mathbf{0} \tag{2.42}$$

or when the principle axes are in the x, y, and z directions,

$$K_{xx} \frac{\partial^2 H}{\partial x^2} + K_{yy} \frac{\partial^2 H}{\partial y^2} + K_{zz} \frac{\partial^2 H}{\partial z^2} = 0 \tag{2.43}$$

For isotropic conditions $K_{xx} = K_{yy} = K_{zz} = K$ and (2.43) becomes

$$\frac{\partial^2 H}{\partial x^2} + \frac{\partial^2 H}{\partial y^2} + \frac{\partial^2 H}{\partial z^2} = 0$$

or

$$\nabla^2 \mathbf{H} = \mathbf{0} \tag{2.44}$$

Equation (2.44) is called the Laplace equation which is a familiar equation in potential field theory. The Laplace equation is common to theory governing heat flow, electric and magnetic fields as well as related potential field situations in fluid mechanics. In fact one method for obtaining solutions for soil water movement is to set up an electric field or viscous flow analog, measure the results and then scale back to the water movement problem. Analytical solutions that have been derived for heat flow or other analogous fields are often useful for the flow of water in soils.

2.10 Saturated One-Dimensional Flow

For saturated flow in the vertical direction equation (2.44) reduces to

$$\frac{d^2 H}{dz^2} = 0$$

Integrating twice we obtain $H = C_1 z + C_2$ where C_1 and C_2 are constants. But at $z = 0$, $H = p/\gamma + z = 0$ so $C_2 = 0$. At $z = L$, $H = d+L$ so $d+L = C_1 L$ and $C_1 = (d+L)/L$.

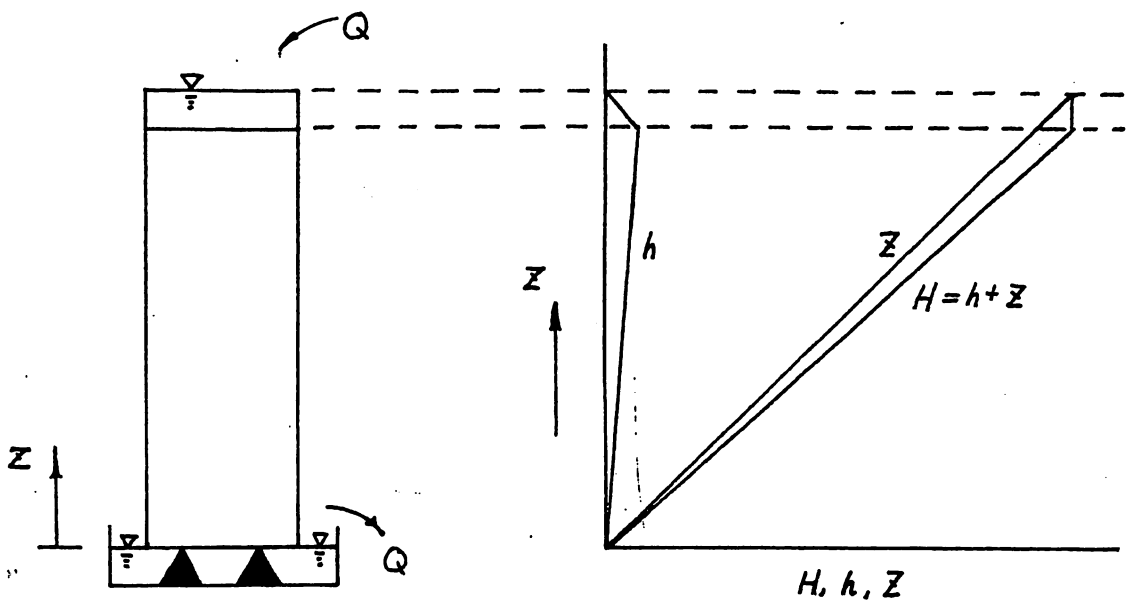

Figure 2-8. Distribution of hydraulic head, H, pressure head, h_1 and position head z for vertical flow in a homogeneous column.

Therefore

$$H = \frac{d+L}{L} z \tag{2.45}$$

and the distribution of H, h, and z are plotted in Figure 2-8 above. The flux can be determined simply from Darcy's law as

$$q_z = -K\frac{dH}{dz} = -K\frac{d+L}{L} \tag{2.46}$$

where the negative sign indicates that flow is in the -z direction.

Although the flux could have been obtained directly from Darcy's law (as in equation (2.2)) without first determining H as a function of z, procedures similar to the above are usually required for more complex flow situations. First the problem is defined and the proper form of the governing equation is identified. Then a general solution of the differential equation is obtained in terms of arbitrary constants (C_1 and C_2 in the above case). The constants are evaluated in terms of boundary and initial conditions giving an expression

for H in terms of position. Then the flux can be obtained at any point in the flow domain by applying Darcy's law.

For saturated, one-dimensional flow in layered soils the equation $\frac{d^2H}{dz^2} = 0$

holds in each of the layers. So for Figure 2-10, $H = C_1 z + C_2$ in layer 1 and $H = C_3 z + C_4$ in layer 2. When $z = 0$, $H = H_3 = 0$. Therefore in the bottom layer $H = C_3 z$.

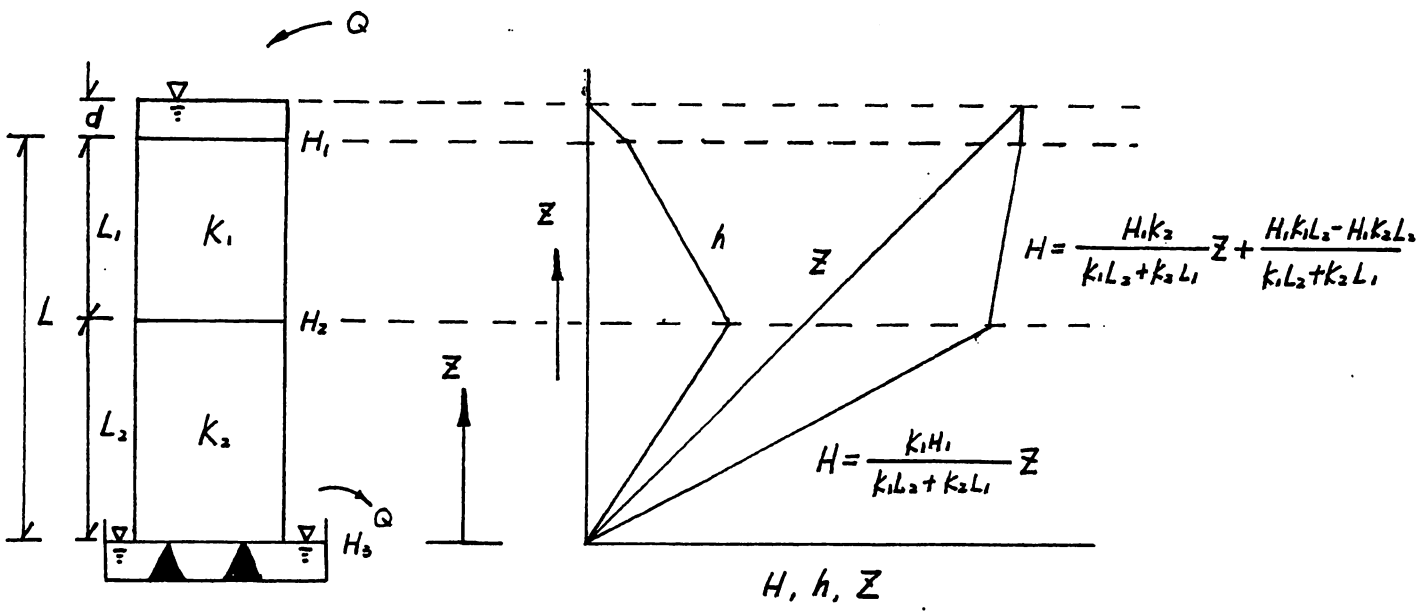

Figure 2-10. Vertical flow in a layered column with $K_1/L_1 > K_2/L_2$.

Since the flux in layer 1 is equal to that in layer 2, $q_1 = -K_1 \frac{\Delta H_1}{L_1} = q_2 = -K_2 \frac{\Delta H_2}{L_2}$

Where $\Delta H_1 = H_1 - H_2$ and $\Delta H_2 = H_2 - H_3$ Then $\frac{\Delta H_1}{\Delta H_2} = \frac{K_2/L_2}{K_1/L_1}$; and, $H_2 = \frac{K_1 H_1 L_2}{K_1 L_2 + K_2 L_1}$

For the bottom layer $H = H_2$ at $z = L_2$ so $C_3 = \dfrac{K_1H_1}{K_1L_2+K_2L_1}$ and

$$H = \frac{K_1H_1}{K_1L_2+K_2L_1}\, z \tag{2.47}$$

Solving for C_1 and C_2 in the top layer we obtain

$$H = \frac{H_1K_2}{K_1L_2+K_2L_1}\, z + \frac{H_1K_1L_2 - H_1K_2L_2}{K_1L_2 + K_2L_1} \tag{2.48}$$

The hydraulic, pressure, and position heads are plotted in Figure 2-10 for a case where $K_1/L_1 > K_2/L_2$. When $K_1/L_1 < K_2/L_2$ equations (2.47) and (2.48) still hold and the head distributions are as shown in Figure 2-11.

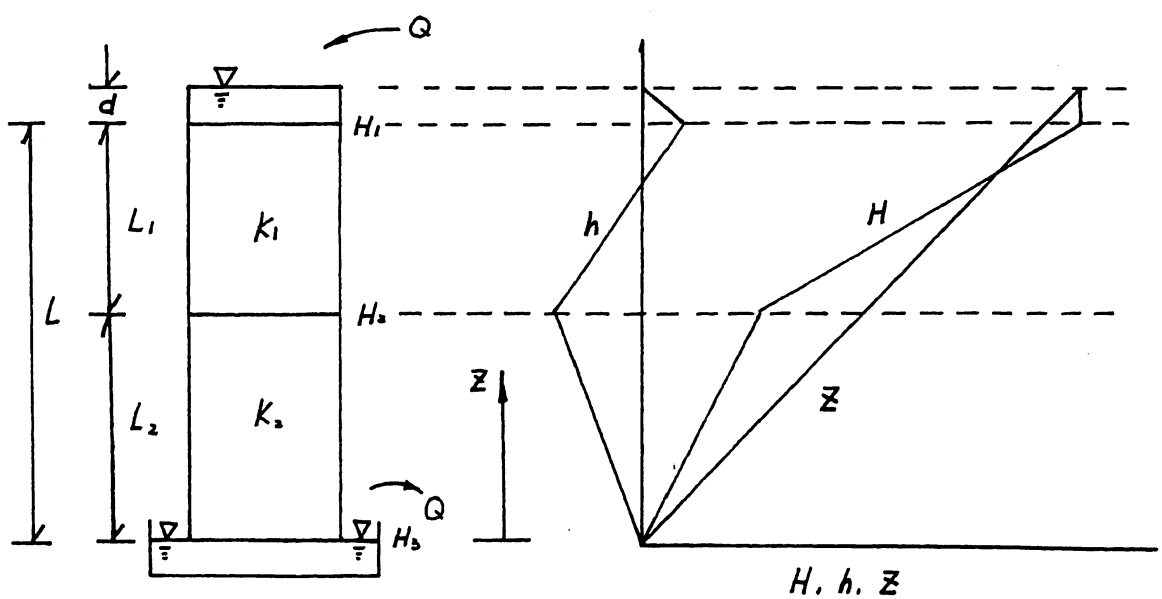

Figure 2-11. Vertical flow in a layered column with $K_1/L_1 < K_2/L_2$.

In this case there is a greater loss of hydraulic head in the top layer than in the bottom layer. We have tacitly assumed that the layered soil is saturated and that the sides of the column are impermeable to both air and water. Under these conditions it is interesting to note that the soil water pressure is negative over most of the column length. It seems reasonable that we could attain saturated or nearly saturated conditions in the column by initially wetting it under suction or by turning it on its side and letting water flow through the column for a long time. However, saturated conditions at negative pressure heads, which could be quite large in absolute magnitude for certain values of K_1/L_1 and K_2/L_2, would seem to be contrary to the relationship between θ and h discussed in section 1.3. Recall that in discussing the $\theta = \theta(h)$ relationship we assumed that air could enter the soil matrix without resistance to replace water drained out. For the situation shown in Figure 2-11, air cannot enter the column so the soil stays saturated. Equations used to characterize flow for unsaturated or combined saturated-unsaturated conditions, such as the Richards equation, usually assume that air moves with negligible resistance and is always at atmospheric pressure in the soil matrix. This is not always the case and can lead to significant errors.

2.11. Equivalent Hydraulic Conductivity for Layered Soils

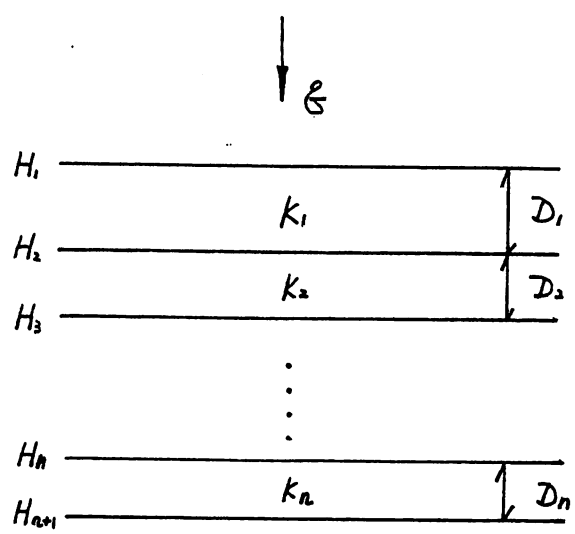

Figure 2-12. Layered medium.

When flow is perpendicular to a series of layers as shown in Figure 2-12 the flux through each layer is the same. Thus

$$q = +K_1 \frac{H_1 - H_2}{D_1}$$

$$q = K_2 \frac{H_2 - H_3}{D_2}$$

$$\vdots$$

$$q = K_n \frac{H_n - H_{n+1}}{D_n}$$

Solving for the ΔH's we obtain

$$\mathbf{H_1 - H_2 = q\, D_1/K_1}$$

$$\mathbf{H_2 - H_3 = q\, D_2/K_2}$$

$$\vdots$$

$$\mathbf{H_{n-1} - H_n = q\, D_{n-1}/K_{n-1}}$$

Adding both sides of the above we obtain

$$\mathbf{H_1 - H_n = q\, (D_1/K_1 + D_2/K_2 + \ldots + D_n/K_n)}$$

Then an equivalent hydraulic conductivity, K_e, can be defined such that

$$q = K_e \frac{H_1 - H_{n+1}}{D}$$

where $D = D_1 + D_2 + \ldots + D_n$ and

$$\mathbf{K_e = D/(D_1/K_1 + D_2/K_2 + D_3/K_3 + \ldots + D_n/K_n)} \qquad (2.49)$$

For flow parallel to the layer $q = q_1 + q_2 + ... + q_n$ and K_e may be defined as

$$K_e = \frac{K_1D_1 + K_2D_2 + ... + K_nD_n}{D_1 + D_2 + ... + D_n} \tag{2.50}$$

The equivalent conductivity can be used to determine flow rates from the hydraulic heads at the end points, H_1 and H_n.

2.12. Saturated Two-Dimensional Flow - Velocity Potential

For saturated flow in two dimensions, Laplace's equation can be written

$$\frac{\partial^2 H}{\partial x^2} + \frac{\partial^2 H}{\partial y^2} = 0 \tag{2.51}$$

Usually we are interested in two-dimensional flow in a vertical section or profile so y in (2.51) represents the vertical position and x the horizontal position. $H = H(x,y)$ is commonly referred to as the potential function and the locus of points where H is constant as equipotential lines. For convenience a function called the velocity potential, ϕ, is often used. It is defined as

$$\phi = -KH = -K(p/\rho g + y) \tag{2.52}$$

Then $u = q_x = \partial\phi/\partial x$ and $v = q_y = \partial\phi/\partial y$ where u and v are the fluxes in the x and y directions, respectively. Some authors (e.g. Kirkham and Powers, 1973) define $\phi = +KH$ so that $u = -\partial\phi/\partial x$, etc. However, in either case, lines of constant ϕ are also referred to as equipotential lines. Also note that

$$\frac{\partial^2 \phi}{\partial x^2} + \frac{\partial^2 \phi}{\partial y^2} = 0$$

$$u = q_x = \frac{\partial \phi}{\partial x}$$

$$v = q_y = \frac{\partial \phi}{\partial y} \tag{2.53}$$

2.13. Stream Function

In previous sections we have discussed the existence of hydraulic head or potential function H = H(x,y) or the velocity potential $\phi = \phi(x,y)$ which is defined at all points in the flow region. It is useful to define another function, also defined at every point in the flow region, and called the stream function $\psi = \psi(x,y)$. This function is defined such that

$$u = \partial\psi/\partial y \ , \ v = -\partial\psi/\partial x \tag{2.54}$$

Therefore

$$\frac{\partial\phi}{\partial x} = \frac{\partial\psi}{\partial y} \tag{2.55}$$

and

$$\frac{\partial\phi}{\partial y} = -\frac{\partial\psi}{\partial x} \tag{2.56}$$

Equations (2.55) and (2.56) are the important Cauchy-Reimann conditions.

From (2.55) and (2.56) we can also readily see that

$$\nabla^2\psi = \frac{\partial^2\psi}{\partial x^2} + \frac{\partial^2\psi}{\partial y^2} = 0 \tag{2.57}$$

The locus of points for which ψ = constant is called a streamline. Physically, streamlines represent paths of flow as may be demonstrated by placing dye at various positions in a sand tank model as described by Luthin (1957). This may also be shown by considering a streamline as in Figure 2-13.

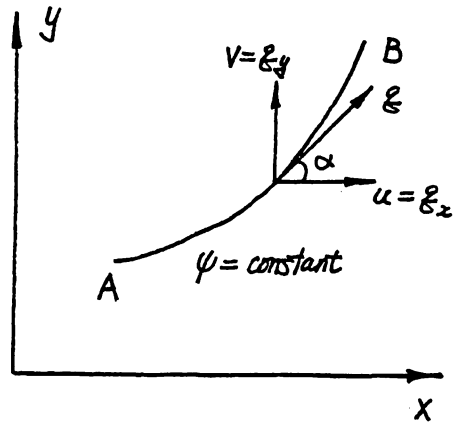

Figure 2-13. Streamline slope.

Since ψ = constant, $d\psi = 0$ along AB. But $d\psi = \frac{\partial\psi}{\partial x}dx + \frac{\partial\psi}{\partial y}dy$ so the slope of the streamline at any point x,y along AB is given by

$$\frac{dy}{dx} = -\frac{\partial\psi/\partial x}{\partial\psi/\partial y} = \frac{V}{u} = \tan\alpha \tag{2.58}$$

Thus the tangent to the streamline at every point x,y is in the flow direction so the streamline represents the flow path as stated above.

For an equipotential line ϕ = constant and

$$d\phi = \frac{\partial\phi}{\partial x}dx + \frac{\partial\phi}{\partial y}dy$$

The slope of equipotential lines is

$$\frac{dy}{dx} = -\frac{\partial\phi/\partial x}{\partial\phi/\partial y} = -\frac{u}{V} \tag{2.59}$$

which is the negative reciprocal of the slope of streamlines. Thus equipotential lines are perpendicular to streamlines in the flow region.

Figure 2-14 illustrates flow between two streamlines ψ_1 and ψ_2.

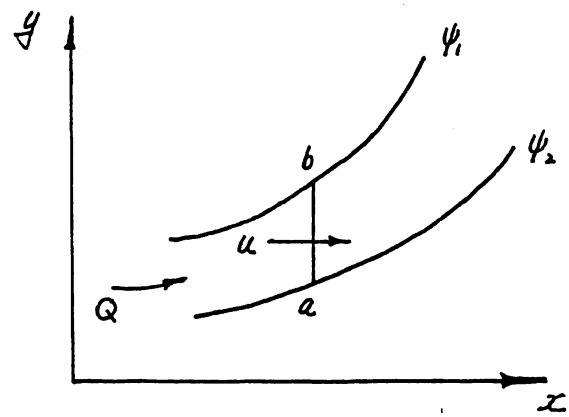

Figure 2-14. Flow between two streamlines ψ_1 and ψ_2.

To determine the flowrate Q we simply integrate the term $\Delta Q = q_x\, dy$ from y = a to y = b. Then

$$Q = \int_a^b u\, dy = \int_a^b \frac{\partial \psi}{\partial y}\, dy = \int_a^b d\psi$$

so

$$Q = \psi_1 - \psi_2 \tag{2.60}$$

Thus, the flowrate between two streamlines is simply the difference in the stream functions ψ_1 and ψ_2.

Finally, it should be pointed out that $\psi = \psi(x,y)$ can be determined from $\phi = \phi(x,y)$ and vice-versa.

$$d\psi = \frac{\partial \psi}{\partial x}\, dx + \frac{\partial \psi}{\partial y}\, dy$$

$$d\psi = -\frac{\partial \phi}{\partial y}\, dx + \frac{\partial \phi}{\partial x}\, dy$$

so

$$\psi = \int -\frac{\partial \phi}{\partial y}\, dx + \frac{\partial \phi}{\partial x}\, dy$$

Likewise

$$\phi = \int \frac{\partial \psi}{\partial y}\, dx - \frac{\partial \psi}{\partial x}\, dy$$

2.14. Boundary Conditions

The Laplace and Richards equations were derived from fundamental relationships, the Darcy or Buckingham-Darcy equations and the law of conservation of mass. The resulting partial differential equations are valid for all points in the flow domain. Thus any solution H = H(x,y,x,t) must satisfy the governing partial differential equation (G.P.D.E.). However the converse is not true. That is, a relationship that satisfies the G.P.D.E. does not necessarily describe H = H(x,y,z,t). A simple example of this is equation (2.45) for vertical flow in a homogeneous soil. Here the equation $H = C_1 z + C_2$ where C_1 and C_2 are arbitrary constants, satisfies the G.P.D.E., $d^2H/dz^2 = 0$. However the actual solution is given by only one set of constants, $C_1 = 0$, $C_1 = (d+L)/L$, which were determined from the boundary conditions. Thus, in order to define a problem such that a unique solution H = H(x,y,z,t) can be obtained, it is necessary to identify both the appropriate G.P.D.E. and the boundary conditions. When this is accomplished the problem is said to be "well posed".

There are essentially four types of boundary conditions encountered when steady saturated flow exists. These are demonstrated in Figure 2-15 for seepage from an irrigation canal to interceptor drains. For this case the flow domain is symmetrical with flow rate in the right one-half of the profile the same as in the left one-half and the hydraulic head distributions in one half being the mirror image of that in the other half. Thus the problem can be solved by considering only one-half of the flow domain and noting that there is no flow across the center line AB. In this case we will neglect flow in the unsaturated zone and consider the saturated region ABCDEFG only.

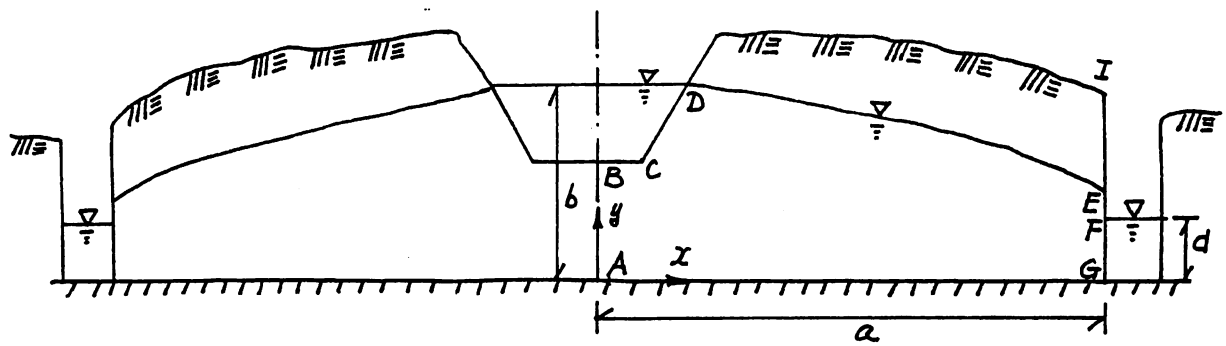

Figure 2-15. Seepage from a canal to interceptor drains.

1. Boundaries covered by water. The pressure distribution along boundaries covered by water may be taken as hydrostatic. Thus the hydraulic head is simply the distance of the free water surface above the datum. For example in Figure 2-15, H = b along boundary BCD, and H = d along FG.

2. Boundaries of constant flux. From Darcy's law $q_n = -K\frac{\partial H}{\partial n}$.

   Therefore $\frac{\partial H}{\partial n} = \frac{-q_n}{K}$ here n is the direction normal to the boundary and q_n is the flux across the boundary. Normally this boundary condition is applied for impermeable boundaries where $q_n = 0$ and $\partial H/\partial n = 0$ such as along boundaries AB and AG in Figure 2-15. However a non-zero flux is sometimes used. For example, because of the characteristics of the underlying material there could be constant vertical seepage of $q_n = \varepsilon$ along the boundary AG. Then that boundary condition would be written $\partial H/\partial y = -\varepsilon/K$.

3. Free surface boundaries. In Figure 2-15 DE is the water table or the free surface and represents the upper boundary of the saturated region. This surface is defined as the locus of points where the soil water pressure is atmospheric. Thus $h = p/\rho g = 0$ and $H = y + C$ where C is a constant. if the datum plane is at the origin C = 0 and H = y. When unsaturated flow is neglected the free surface is treated as a streamline, across which there is no

flow. Actually this is only an approximation as some flow will enter from the overlying unsaturated zone. However if Laplace's equation is taken as the G.P.D.E. then DE must be assumed a streamline. This approach is taken in most books on groundwater and seepage.

4. Surface of seepage. The surface of seepage (EF in Figure 2-15) represents a boundary where water exits the flow domain. As with the free surface the pressure is zero so $h = 0$ and $H = y$. The surface of seepage differs from the free surface (water table) above, in that it is always on a boundary between the soil and the atmosphere and there is flow across the surface of seepage while the free surface is assumed to be a streamline.

Two separate approaches can be made to problems such as the one shown in Figure 2-15. We can neglect flow in the unsaturated zone as indicated above and use Laplace's equation as the G.P.D.E. This traditional approach, which would be taken by most groundwater hydrologists, would require definition of the free surface DE, the upper boundary of the saturated regime. Another approach would be to use the Richards equation (Equation (2.40)) for steady state; i.e. $\partial h/\partial t = 0$. Then the upper boundary condition would simply be the condition at the physical boundary of the flow domain, the soil surface. While the boundary conditions would be easier to describe, the G.P.D.E. is more difficult to solve and the required soil properties are more difficult to obtain since $K(h)$ rather than just K_o, the saturated hydraulic conductivity, is needed for this approach. Generally the first approach will be easier to use because methods for approximating the free surface are available for most situations. However the later approach is more exact and will be necessary for certain situations as we shall see later.

PROBLEMS

2.1. Derive the equation for viscous flow between closely spaced parallel plates and present the result in a form analogous to Darcy's law. Use a flow path length of L between points 1 and 2 where the pressure is p_1 and p_2. The distance between the plates is 2B.

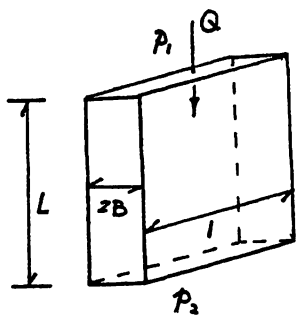

Answer: $$Q = \frac{2}{3} \frac{(H_1 - H_2)\, B^3}{\mu L} \rho g$$

A = 2 B X 1 = 2B

so $$q = \frac{Q}{A} = -\frac{1}{3} \frac{B^2}{\mu} \frac{(H_2 - H_1)}{L} \rho g$$

2.2. Derive the equation of a continuity for flow in an unsaturated isotropic material for (a) rectangular coordinates (b) cylindrical coordinates.

2.3. Repeat 2-2 (a) for an anisotropic material which has its principle axes of the hydraulic conductivity tensor, K, in the x,y, and z directions; i.e. $K_{\ell m} = 0$ for $\ell \neq m$.

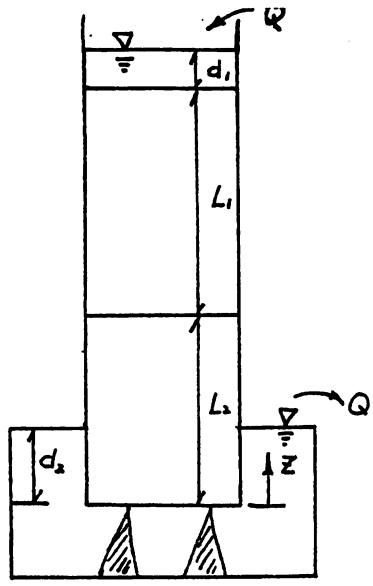

2.4. In the above sketch $d_2 = 0$, $d_1 = 5$ cm, $L_1 = 40$ cm, $L_2 = 35$ cm,, $K_1 = 15$ cm/hr, $K_2 = 5$ cm/hr. (a) Find **q** Plot (to scale) H vs. Z and $h = p/\rho g$ vs. z. (b) Rework Part a for $d_2 = 20$ cm.

2.5. Work pb 2-4 (parts a and b) with $K_1 = 5$ cm/hr and $K_2 = 15$ cm/hr.

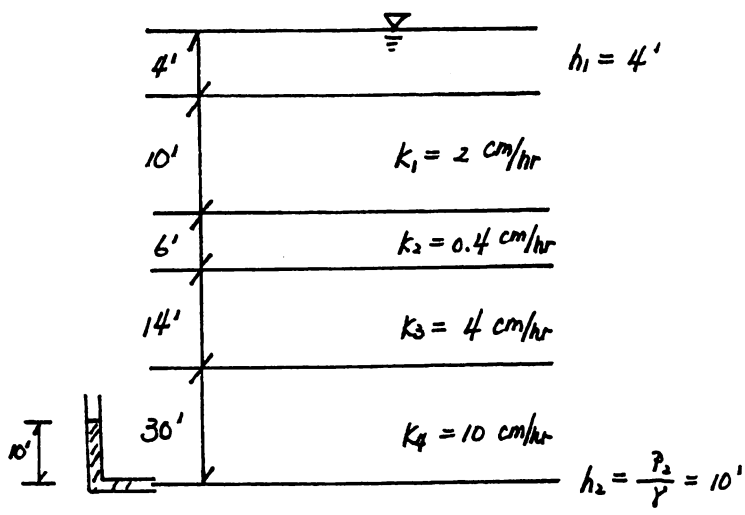

2.6. Determine the downward seepage in the layered system above. What is the head loss across the 6' layer?

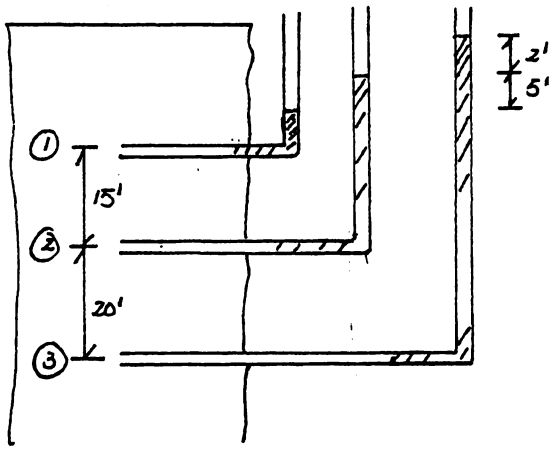

2.7. The hydraulic conductivity between 1 and 2 above is 1 cm/hr. (a) What is the flowrate? (b) In which direction does water flow? (c) What is K between points 2 and 3?

2.8. (a) What is the seepage rate under the dam shown below? (b) What is the pressure force tending to lift the dam vertically upward? (c) Where does this force act? (d) What is the pressure head at point A, 5' from the upstream face of the dam?

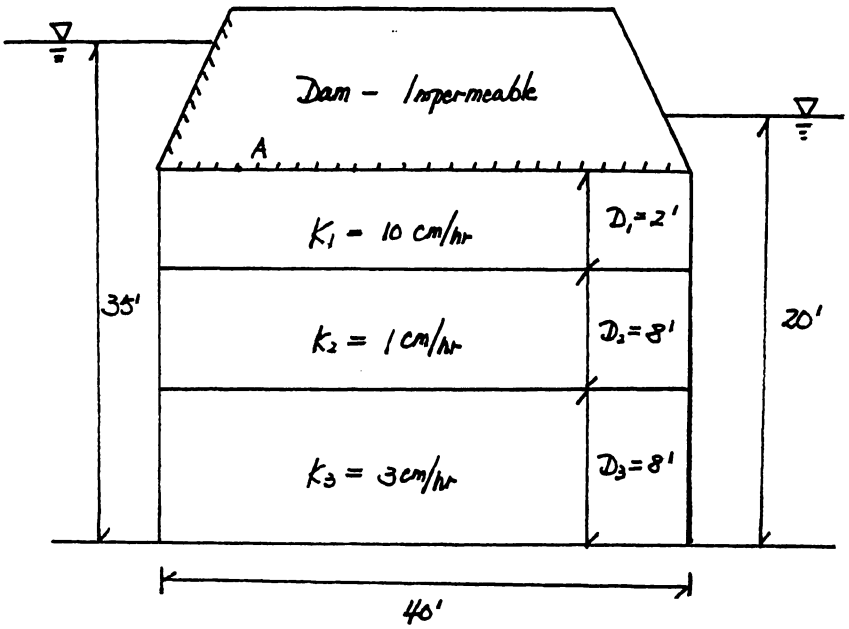

2.9 The following solutions were proposed for two-dimensional saturated flow in an isotropic, homogeneous soil. Are they valid solutions to the governing equations?

a. $\phi = -KH = \ln x + \ln y$

b. $\psi = x^2 + 3y^2 + 2xy$

c. $\phi = x^2 - y^2 - 3x + 4xy + 2y$

d. $\psi = cx^n$ where c and n are constant integers.
Find the values of c and n for which this is a possible solution.

e. $\phi = \sin^{-1} x/y$

2.10. For a given flow regime in a uniform isotropic soil, the stream function (ψ (x,y) is

$$\psi = x^2 - y^2$$

Determine the potential function (x,y) and the magnitude and direction of the flux at points (1,0), (1,1) and (2,0).

minus, not plus

2.11 The following solution was proposed for saturated flow in a uniform, isotropic soil.

$$\phi = -KH = x^3y + xy^3 + 5$$

a) Is this a solution to the Laplace Equation? (Show your work).

b) If it is, find the stream function ψ (x,y).

2.12 Repeat problem 2.11 for the following function

$$\phi = 4x^2 + 2xy - 4y^2 + 9$$

2.13

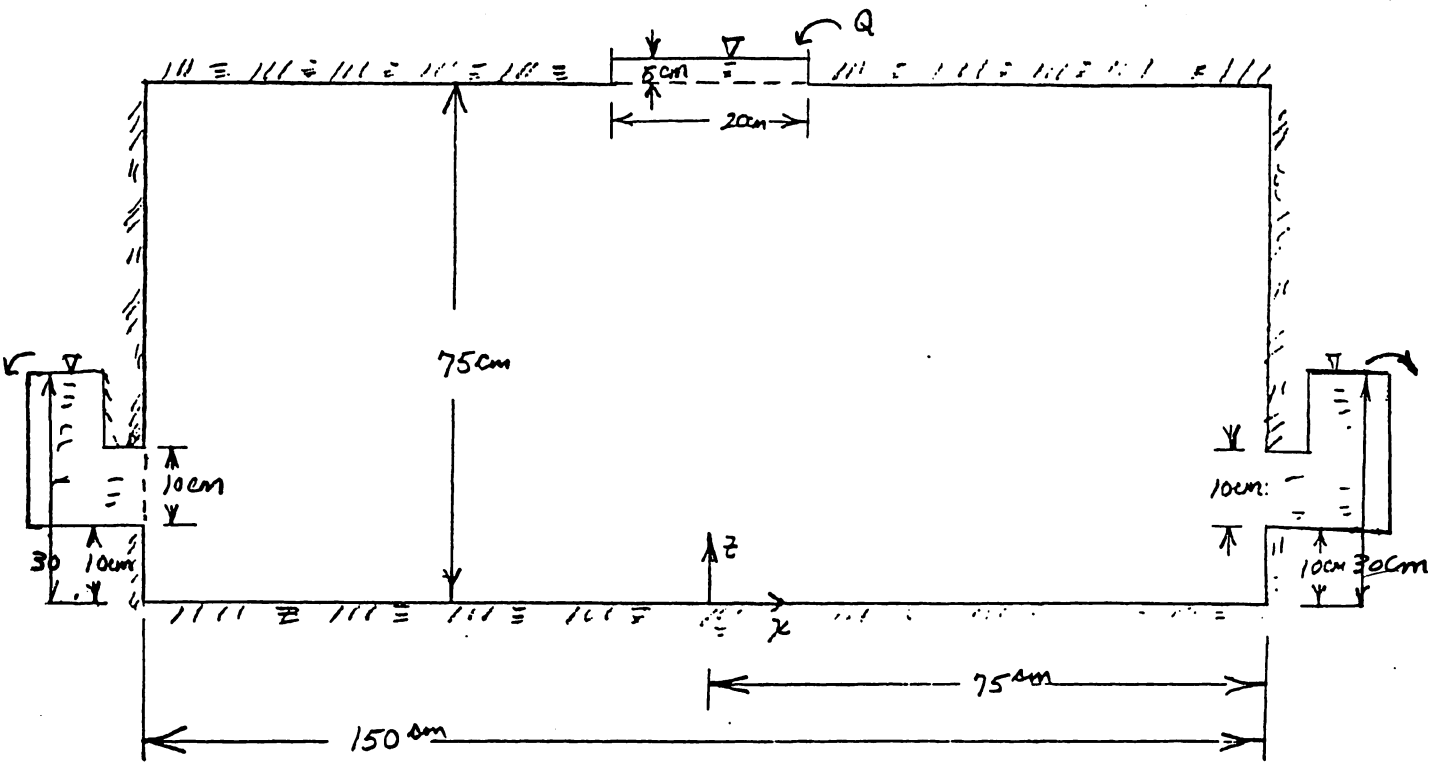

Soil is enclosed in a container with impermeable sides except at the top where water flows in and at each end where water flows out. Assuming the soil is uniform and isotropic,

a) Write the governing equation for the above situation. Define each term.

b) What are the boundary conditions for this problem?

CHAPTER 3

Solutions for Steady Saturated Flow

CHAPTER 3

SOLUTIONS FOR STEADY SATURATED FLOW

Although steady saturated flow rarely occurs in agricultural drainage situations, it is nevertheless important in developing methods to characterize drainage. The solution methods demonstrated in this chapter will be useful for a variety of other water movement problems. Most of the solutions presented here may be found in other sources (e.g. Luthin, 1957; Kirkham and Powers, 1972). They are presented here to demonstrate solution techniques and to provide source material for engineering calculations and approximations.

3.1. Flow Net Solutions

One of the oldest and most useful methods of characterizing steady saturated flow is the **flow net**. Although this graphical procedure often requires tedious trial-and-error adjustments and a certain amount of practice and patience on the part of the user, it is one of the more valuable methods for solving two dimensional flow problems. We have shown already (2.13) that streamlines and equipotential lines intersect at 90° angles and thus form an orthogonal network in the flow regime. Consider the equipotential lines and streamlines in Figure 3-1.

The flowrate between two streams, ψ_1 and ψ_2 is,

$$\Delta Q = q\Delta n = -K\frac{H_2 - H_1}{\Delta S}\,\Delta n = \psi_2 - \psi_1$$

If the flownet is drawn throughout the flow domain such that $\Delta\psi = \psi_2 - \psi_1 = \psi_3 - \psi_2$ ... then ΔQ will be the same as given above for all stream tubes and $Q = \sum \Delta Q = N_f \Delta Q$ where N_f is the number of flow channels or stream tubes. Likewise we can draw the equipotential lines such that $H_2 - H_1 = H_3 - H_2 = \ldots = \frac{\Delta H}{N_e}$ where N_e is the number of equipotential drops from the point where flow initiates to its exit.

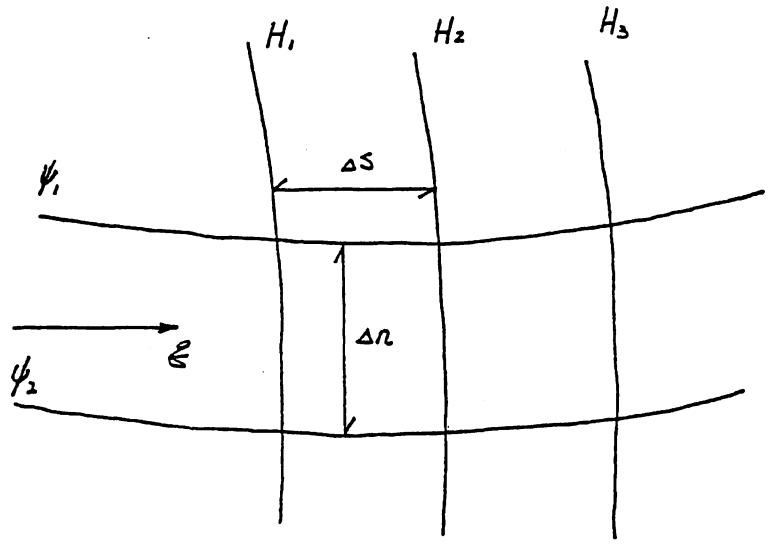

Figure 3-1. A network of streamlines and equipotential lines.

Substituting into the above we have,

$$Q = -K\frac{N_f}{N_e}\frac{\Delta n}{\Delta S}\ \Delta H \tag{3.1}$$

Note that we have not limited the number of equipotential lines or streamlines that can exist in a given flownet. We will now choose to draw enough equipotential and streamlines to insure that $\Delta n = \Delta s$ and,

$$Q = -K\frac{N_f}{N_e}\ \Delta H \tag{3.2}$$

Then the equipotential and streamlines are drawn such that every streamline crosses every equipotential line at a right-angle and form a network of curvilinear squares. A choice of $\Delta s = 2\Delta n$ or $\Delta n = 2\Delta s$ would have been equally valid but the rectangular enclosures resulting would be harder to accomplish by visual inspection for most cases.

An example of a flownet for seepage under a weir is given in Figure 3-2. If the datum in 3.2 is taken at the impermeable layer, the boundary condition along AB is the equipotential, H = 80 ft. The boundary BCDE is a streamline and EF an equipotential, H = 60 ft. The boundary LG is also a streamline which is assumed to intersect the equipotential

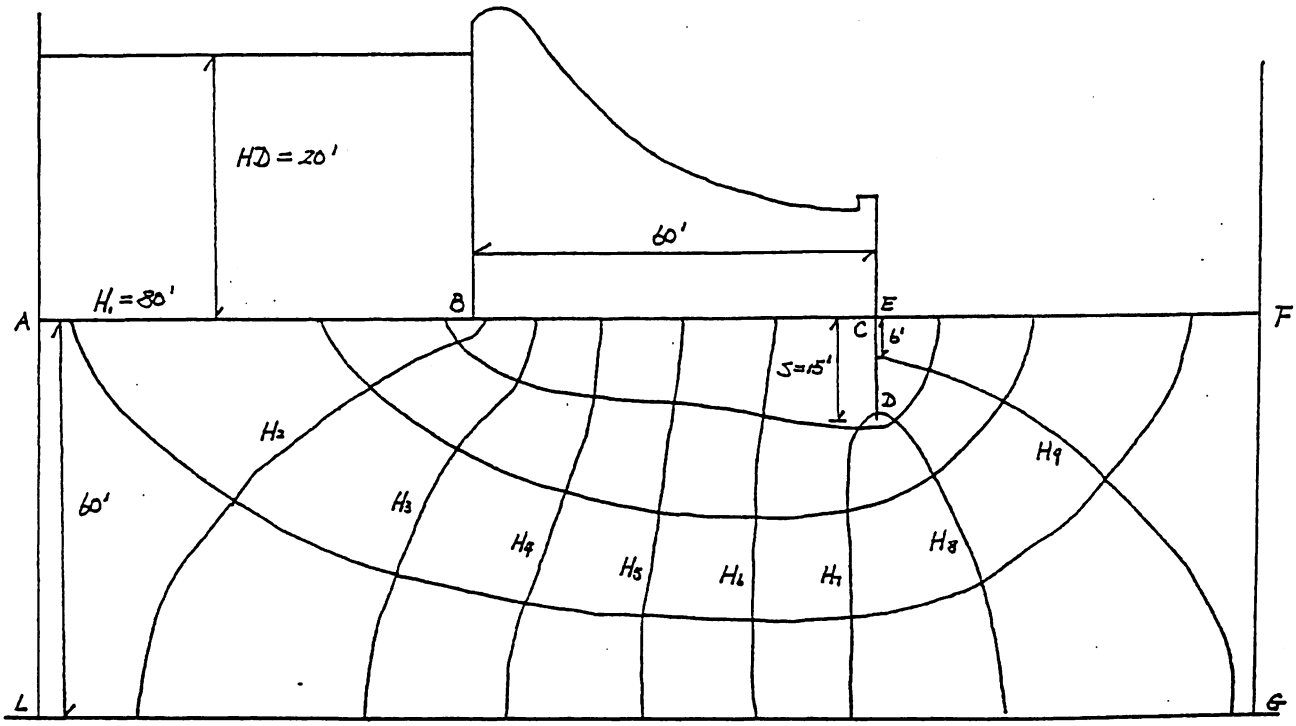

Figure 3-2. Flownet solution for seepage under a weir.

lines AB and EF at $-\infty$ and $+\infty$, respectively. For this particular case we have $N_e = 9$ so there is 20/9 = 2.22 ft drop of hydraulic head between adjacent equipotential lines. Thus the distribution of H, and therefore h = H-z, can be determined directly from the flownet solution. By knowing, $N_f = 4$, the flowrate can be determined as:

$$Q = + K\frac{4}{9}\,20 = 8.89\,K$$

If, for example K = 0.5 ft/day, Q = 4.44 ft^3/day per ft of weir length.

Forchheimer is credited (Harr, 1962) with developing the flownet method and Harr (1962) lists the following procedures for construction of a flow net. Harr suggests a paper presented by Casagrande in 1940 will be of particular assistance to the beginner.

1. Draw the boundaries of the flow region to scale so that all equipotential lines and streamlines that are drawn can be terminated on these boundaries.
2. Sketch lightly three or four streamlines, keeping in mind that they are only a few of the infinite number of curves that must provide a smooth transition between the

boundary streamlines. As an aid in the spacing of these lines, it should be noted that the distance between adjacent streamlines increases in the direction of the larger radius of curvature.

3. Sketch the equipotential lines, bearing in mind that they must intersect all streamlines, including the boundary streamlines, at right angles and that the enclosed figures must be squares.

4. Adjust the locations of the streamlines and the equipotential lines to satisfy the requirements of step 3. This is a trial-and-error process with the amount of correction being dependent upon the position of the initial streamlines. The speed with which a successful flow net can be drawn is highly contingent on the experience and judgement of the individual.

5. As a final check on the accuracy of the flow net, draw the diagonals of the squares. These should also form smooth curves which intersect each other at right angles.

3.2. Radial Flow to a Well

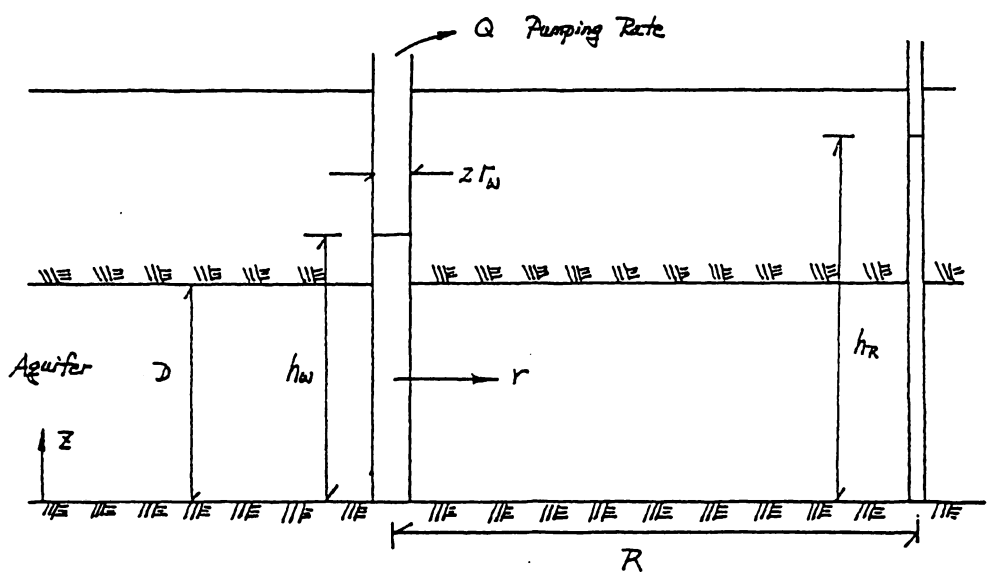

Figure 3-3. Radial flow to a well.

The solution to this problem is well known (c.f. Kirkham, 1957) but it serves as a good illustration of analytical solution methods for steady saturated flow. Flow occurs in an aquifer of thickness D to a well of radius r_w. The hydraulic head at a distance from the well of r = R is assumed constant at $H = h_R$. We assume steady state conditions so the G.P.D.E. is the Laplace equation $\nabla^2 H = 0$ or $\nabla^2 \phi = 0$. In cylindrical coordinates this equation may be written as,

$$\frac{1}{r}\frac{\partial H}{\partial r} + \frac{\partial^2 H}{\partial r^2} + \frac{1}{r^2}\frac{\partial^2 H}{\partial \theta^2} + \frac{\partial^2 H}{\partial z^2} = 0$$

The flow is symmetrical with no flow in the θ direction so $\partial^2 H/\partial\theta^2 = 0$. Likewise there is no flow in the z direction and $\partial^2 H/\partial z^2 = 0$. Therefore,

$$\frac{1}{r}\frac{dH}{dr} + \frac{d^2 H}{dr^2} = 0 \qquad (3.3)$$

The boundary conditions are:

1. $H = h_w$, $r = r_w$
2. $H = h_R$, $r = R$

Equation 3.3 may be rearranged and written as,

$$\frac{d}{dr}\left(r\frac{dH}{dr}\right) = 0$$

Integrating both sides we obtain,

$$r\frac{dH}{dr} = C_1$$

$$\frac{dH}{dr} = \frac{C_1}{r}$$

$$dH = \frac{C_1 dr}{r}$$

Integrating again yields,

$$\mathbf{H = C_1 \ln r + C_2}$$

From B.C. 1,

$$\mathbf{h_w = C_1 \ln r_w + C_2}$$

From B.C. 2,

$$\mathbf{h_R = C_1 \ln R + C_2}$$

Solving for C_1 and C_2 we obtain,

$$C_1 = \frac{h_w - h_R}{\ln(r_w/R)}$$

$$C_2 = h_w + \frac{h_R - h_w}{\ln (r_w/R)} \ln r_w$$

Then

$$H = \frac{\Delta h}{\ln (R/r_w)} \ln r + h_w - \frac{\Delta h}{\ln (R/r_w)} \ln r_w$$

where $\Delta h = h_R - h_w$

or

$$H = \frac{\Delta h}{\ln (R/r_w)} \ln (r/r_w) + h_w \qquad (3.4)$$

All terms on the right hand side of equation (3.4) are known and constant except r. Therefore lines of constant r will be equipotential lines.

The flow rate, Q, can be determined by using Darcy's law and equation (3.4) to evaluate the flux, q_r.

$$q_r = -K\, dH/dr = -K \frac{\Delta h}{\ln (R/r_w)} \frac{1}{r} \qquad (3.5)$$

We can determine Q by evaluating q_r at any r and integrating over the flow area. Choosing r $= r_w$ we get,

$$q_r = -K \frac{\Delta h}{1n\ (R/r_w)} \frac{1}{r_w}$$

and

$$Q = \int_A q_r|_{r=r_w}\, dA = \int_{\theta=0}^{2\pi} -K \frac{\Delta h}{1n\ (R/r_w)} \frac{1}{r_w} Dr_w\, d\,\theta$$

$$Q = -K \frac{\Delta h\ D}{1n\ (R/r_w)}\ 2\pi \tag{3.6}$$

Note that Q is negative because flow is in the -r direction. Note also that the expression for flow rate may be written as,

$$\mathbf{Q = K\ F\ \Delta\ H}$$

where F is a factor entirely dependent on the geometry. Notice finally that the procedure in the above problem was first to determine the distribution H = H(r) from the G.P.D.E. and B.C.'s. Then hydraulic gradient was evaluated from H = H(r) and the flow rate determined by integration. This is an often used but not necessarily exclusive scheme of solving saturated flow problems.

Now we will determine the stream function, $\psi = \psi(x,y)$ for the above problem. From the Cauchy-Riemann conditions we know that,

$$\frac{\partial \phi}{\partial x} = \frac{\partial \psi}{\partial y}$$

$$\frac{\partial \phi}{\partial y} = -\frac{\partial \psi}{\partial x}$$

where $\phi = -KH$

or

$$\phi = -\frac{K\ \Delta h}{1n\ (R/r_w)}\ 1n\ (r/r_w) - K\ h_w$$

For convenience we write,

$$\phi = A \ln (r/r_w) - K h_w$$

where $A = -K\Delta H/\ln (R/r_w)$.

This may also be written in the xy coordinate system as,

$$\phi = A \left[\ln \sqrt{x^2 + y^2} - \ln \sqrt{x_w^2 + y_w^2} \right] - K h_w \tag{3.7}$$

Differentiating and simplifying,

$$\frac{\partial \phi}{\partial x} = \frac{Ax}{x^2 + y^2}$$

Then

$$\frac{\partial \psi}{\partial y} = \frac{Ax}{x^2 + y^2}$$

and

$$\int \frac{\partial \psi}{\partial y} dy = \int \frac{Ax}{x^2 + y^2} dy$$

$$\psi + f(x) = A \tan^{-1} \frac{y}{x}$$

where f = f(x) is an arbitrary function of x.

Therefore,

$$\psi = A \tan^{-1} (y/x) + f(x) \tag{3.8}$$

We can evaluate f(x) by using the other C.R. condition,

$$\frac{\partial \psi}{\partial x} = -\frac{\partial \phi}{\partial y}$$

From (3.8)

$$\frac{\partial \psi}{\partial x} = -\frac{Ay}{x^2 + y^2} + \frac{df}{dx}$$

and from (3.7)

$$\frac{\partial\phi}{\partial y} = \frac{Ay}{x^2 + y^2}$$

Therefore

$$\frac{\partial\phi}{\partial y} = -\frac{\partial\psi}{\partial x}$$

if $\frac{df}{dx} = 0$, or f(x) = C

Finally $\psi = A \tan^{-1} (y/x) + C$

but $\tan^{-1} (y/x) = \theta$

so $\psi = A\,\theta + C$

If we let $\psi = 0$ when $\theta = 0$, $C = 0$ and $\psi = A\theta$. Therefore lines of constant ψ are lines where θ is constant; i.e. they are rays starting at the origin.

At $\theta = 2\pi$, $\psi = 2\pi A$, and according to equation (2.60), $Q_d = \psi_1 - \psi_2 = 2\pi A$ (for a unit depth)

$$A = -K\,\Delta h/\ln(R/r_w)$$

so

$$Q = 2\pi AD = r\pi(-K\Delta h)/\ln(r/r_w)D$$

$$Q = -\frac{2\pi K\Delta hD}{1n\ R/r_w}$$

which is the same as 3.6 as expected.

3.3. Drainage to a Single Drain Tube

Drainage to a single drain tube of radius, r, located at a distance d below the surface is illustrated in Figure 3-4. Water is ponded at a depth, t, on the surface, which is infinite in extent, and the profile is bounded at a great (∞) depth by an impermeable layer so that all subsurface flow exits through the drain tube. The drain tube outlets to a ditch where the water level stands a distance S above the tube center. Kirkham (1957) presented a detailed solution to this problem in the book, **Drainage of Agricultural Lands**, J. N. Luthin, ed.

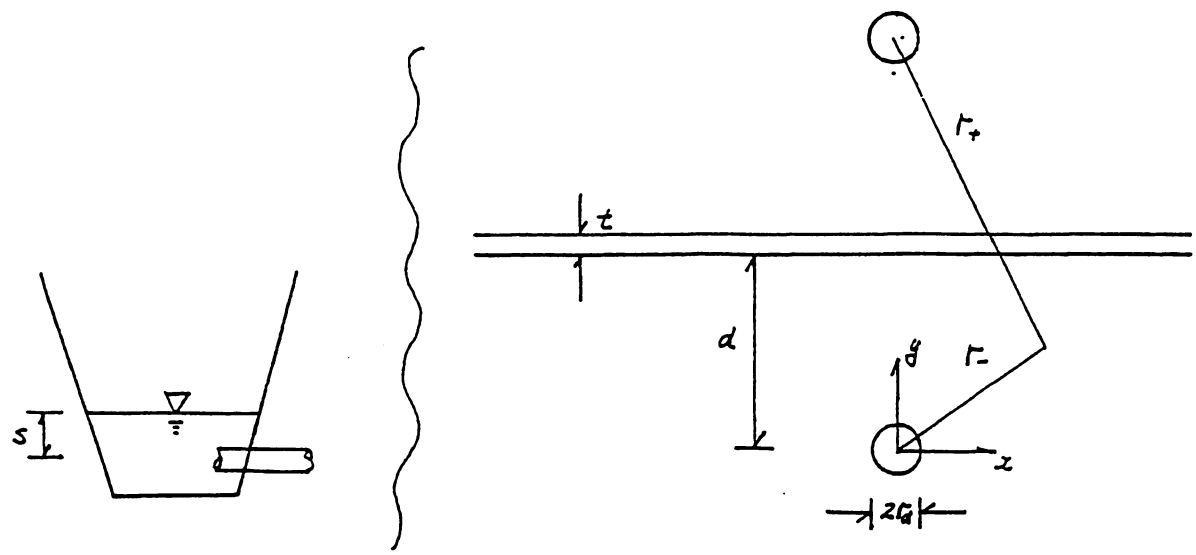

Figure 3-4.

This problem again involves saturated flow and the G.P.D.E. is $\nabla^2 H = 0$. The boundary conditions are:

1. $H = d + t,\ y = d,\ -\infty \leq x \leq +\infty$

2. $H = S,\ x^2 + y^2 = r_d^2$

The problem may be solved by the method of images which Kirkham notes was originally discovered by Thomson (Lord Kelvin) in 1850.

The method of images is employed by imagining a mirror image of the semi-infinite soil medium above the soil surface. The drain tube is considered to be a sink in an infinite medium and the water flowing into the drain is considered to come from a source which is the mirror image of the tube and is located a distance d above the surface. The soil surface is then a line of symmetry between the source and sink along which the potential is constant.

Assume a solution of the form,

$$\mathbf{H = D\,(\ln r_- - \ln r_+) + G}$$

$$H = D\,(\ln\sqrt{x^2 + y^2} - \ln\sqrt{x^2 + (y - 2d)^2}) + G \tag{3.9}$$

This solution satisfies the Laplace equation as can be easily shown. It will also satisfy B.C. 1 if we set G = d + t. Then H = d + t when y = d. From B.C. 2,

$$s = D\,[\ln r_d - \ln\sqrt{x_d^2 + (y_d - 2d)^2}] + d + t$$

Then

$$D = \frac{d + t - s}{\ln \dfrac{\sqrt{x_d^2 + (y_d - 2d)^2}}{r_d}}$$

Note that D cannot be defined exactly because y_d and x_d can vary according to the relationship $x_d^2 + y_d^2 = r_d^2$. However, this variation will be small if r_d is small compared to d. If x = 0 and $y = r_d$,

$$D = \frac{t + d - s}{ln\,\dfrac{2\,d - r_d}{r_d}} = \frac{t + d - s}{ln\,(\dfrac{2d}{r_d} - 1)}$$

And for y = 0, $x = \pm r_d$

$$D = \frac{t + d - s}{\ln \dfrac{\sqrt{4d^2 + r_d^2}}{r_d}} = \frac{t + d - s}{\ln\sqrt{(\dfrac{2d}{r_d})^2 + 1}}$$

For $y = -r_d$, x=0

$$D = \frac{t + d - s}{\ln \dfrac{2d + r_d}{r_d}} = \frac{t + d - s}{\ln\,(\dfrac{2d}{r_d} + 1)}$$

If $r_d << d$, $r_d << 2\,d$, and $r_d^2 << 4d^2$.

Then $2d/r_d >> 1$ and we can write an approximate expression for D as,

$$D = \frac{t + d - s}{\ln \frac{2d}{r_d}}$$

Then 3.9 may be expressed as,

$$H = D\,(\ln \sqrt{x^2 + y^2} - \ln \sqrt{x^2 + (y - 2d)^2}) + d + t \qquad (3.10)$$

where

$$D = \frac{t + d - s}{\ln \frac{2d}{r_d}} \qquad (3.11)$$

Kirkham (1957) cites an exact expression for D which was developed by Smythe (1939)

$$\mathbf{D = (d + t - s)/\cosh^{-1}\,(d/r_d)} \qquad (3.12)$$

We can determine the flow rate per unit length of drain pipe as follows:

$$Q = \int_A q_n \; dA = \int_{soil\ surface} -K \frac{\partial h}{\partial y}\Big|_{y=d} dA$$

∂H

$$Q = \int_{-\infty}^{+\infty} - K \frac{\partial h}{\partial y}\Big|_{y=d} dx$$

The student should show that,

$$\frac{\partial H}{\partial y}\Big|_{y=d} = \frac{2Dd}{x^2 + d^2}$$

and

$$Q = -K \int_{-\infty}^{+\infty} \frac{2\,Dd}{x^2 + d^2}\, dx = -2\pi KD$$

$$Q = -2\pi KD = \frac{-2\pi K(t + d - s)}{\ln\,(2d/r_d)} \tag{3.13}$$

The same result can be obtained by integrating the flux over the surface of the drain tube but the process is somewhat more difficult.

The assumptions under which the above solution was obtained should be re-emphasized at this point. The assumptions are:

1. A homogeneous, isotropic soil with a constant hydraulic conductivity
2. The radius of the drain tube is small compared to its depth, i.e. $r_d << d$
3. The drain acts as an unlined tube so that water may enter at all points along its surface.

This last assumption is probably the most limiting so far as usefulness of the solution is concerned. Water enters drain tubing through holes or slits in the tubing or the cracks between tile joints. Even unlined mole channels are not usually fully permeable because of the compressing and smearing effects of equipment used to install the moles. consideration of these effects requires analysis of the flow in three dimensions. We will return to these analyses which have been conducted by Schwab and Kirkham (1951) in a later section.

3.4. Drainage from a Ponded Surface to Parallel Drain Tubes

The solution to this problem has also been presented by Kirkham (as have so many of the drainage problems for steady saturated flow). The solution is presented in detail in **Drainage of Agricultural Lands** edited by Luthin.

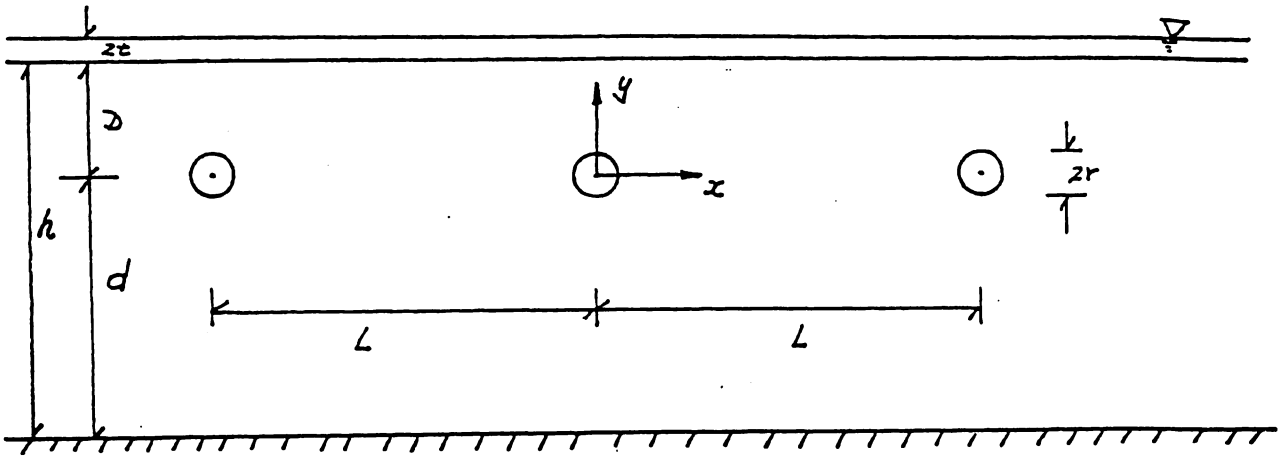

Figure 3-5.

The G.P.D.E. is again the Laplace equation, $\nabla^2 H = 0$. By symmetry we can see that flow is the same between any two adjacent drain tubes so that it is sufficient to solve the region bounded by vertical planes at $x = \pm L/2$. All of the flow within this region would flow to the drain tube at the origin. Kirkham notes that a piece of sheet metal could be vertically inserted at $x = \pm L/2$ without changing flow patterns. The boundary conditions may be written as follows.

1.	$\partial H/\partial x = 0$,	$x = L/2$,	$-d \leq y \leq D$
2.	$\partial H/\partial x = 0$,	$x = -L/2$,	$-d \leq y \leq D$
3.	$H = D + t$,	$-L/2 \leq x \leq L/2$,	$y = D$
4.	$\partial H/\partial y = 0$,	$-L/2 \leq x \leq L/2$,	$y = -d$
5.	$H = r$,	$x^2 + y^2 = r^2$	

Boundary condition 5 assumes the drain flows full with no back pressure. If there is water standing in the outlet at height s above the drain center as in section 3-3, use H = s in B.C. #5.

As for the single tube in section 3-3 the solution may be obtained by the method of images. The reader is referred to Kirkham (1957) for details of the solution which may be expressed as,

$$H = D + t + q \sum_{m=-\infty}^{\infty} \ln \left[\frac{\cosh \frac{\pi(x - mL)}{2h} - \cos \frac{\pi y}{2h}}{\cosh \frac{\pi(x - mL)}{2h} + \cos \frac{\pi y}{2h}} \right.$$

$$\left.\frac{\cosh\dfrac{\pi(x - mL)}{2h} + \cos\dfrac{\pi(2D - y)}{2h}}{\cosh\dfrac{\pi(x - mL)}{2h} - \cos\dfrac{\pi(2D - y)}{2h}}\right]$$

where q is the average reduced flux at the drain tube and is equal to,

$$\mathbf{q = (t + D - r)/\,f} \tag{3.15}$$

where

$$f = 2\ \ln \frac{\tan\dfrac{\pi(2D - r)}{4h}}{\tan\dfrac{\pi r}{4h}} + 2\sum_{m=1}^{\infty} \ln$$

$$\left[\frac{\cosh\dfrac{\pi mL}{2h} + \cos\dfrac{\pi r}{2h}}{\cosh\dfrac{\pi mL}{2h} - \cos\dfrac{\pi r}{2h}} \cdot \frac{\cosh\dfrac{\pi mL}{2h} - \cos\dfrac{\pi(2D - r)}{2h}}{\cosh\dfrac{\pi ml}{2h} + \cos\dfrac{\pi(2D - r)}{2h}}\right] \tag{3.16}$$

The flowrate entering a single drain turns out to be,

$$\mathbf{Q = 4\pi Kq} \tag{3.17}$$

This expression can be obtained by determining $\partial H/\partial y$ at y = D and integrating over x from x = -L/2 to x = L/2, an exercise that is left to the student.

Kirkham analyzed the drainage situation in Figure 3-5 for a specific case, L = 40 ft, r = 0.3 ft, D = 4.5 ft, and h = 6 ft. The flownet he obtained is shown below. Kirkham noted the concentration of streamlines directly over the drain tube; he found that, for the case in Figure 3-5, more than 95% of the total flow entered the soil from x = -10 ft to x = +10 ft and less than 5% entered from x = $\pm$10 to $\pm$20 ft. The practical implication of this is that the field surface should be lower just over the drains than in the surrounding area so that surface

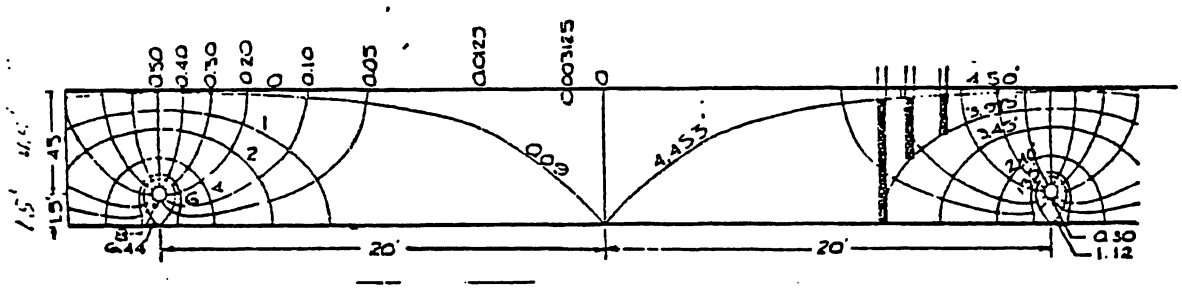

Figure 3-5. Flow net for equally spaced drain tubes, running just full, of diameter 0.60 ft, spacing 40 ft and depth 4.5 ft in ponded soil overlying an impervious layer at 6 ft depth; in the left hand half of the figure the equipotentials are in arbitrary units 0, 1, 2, ...; in the right hand half the equipotentials are given in feet of hydraulic head referred to a horizontal plane through a drain axis, the piezometers show the head of water, 3,975 ft on the 3.974 ft equipotential; soil is water-saturated, depth of ponded water is infinitesimal; streamlines are numbered (on one side only), 0.50, 0.40, 0.30, ...; the difference between any two streamline values gives the fraction of the total flow of a tube entering the tube between two streamlines. From Kirkham (1949).

water will accumulate near the drain and enter the drain tube readily. High backfill over the tubes would not be desirable.

Kirkham also made the following observations concerning this solution:

> "The flow net also shows that a large portion (about 40%) of the water enters the drain tube through its underside, and this implies that the tube should not be immediately next to the impervious layer if maximum flow is desired. To check on this point, the author performed sand tank experiments in which drain tubes (cylindrical wire screens) were placed first next to the impervious layer (bottom of the tank) and then placed a small distance above the impermeable layer. The flow rate was found to increase when the tubes were raised, despite the fact that the hydraulic head difference between the soil surface and drain tube was decreased by raising the tube. Obviously the increase in flow will not always increase as the drain tubes are raised. Above certain heights the gain in flow due to increased freedom of entry at the under side of the tube will be offset by the flow Loss due to increase in hydraulic head across the flow region. By use of Equation (III.39) in which the drain spacing a was taken equal to infinity (so that the summation in Equation (III.38) was zero) the author (Kirkham, 1941, 1948) showed theoretically that

for drain tubes of diameter 6 inches and an impermeable layer at 6-foot depth, the seepage Q per unit length of tube per unit time would be a maximum with the drain tube center at about 4.5 feet. It is emphasized that this result is for the ponded water condition. With the water table below the soil surface, the drainage rate would be faster if the tube were lower. Even so it appears that it would not be a good practice to have the bottom of the tube sealed, as by having the tube half embedded in an impermeable subsoil. The problem for a tube partially embedded in an impervious layer has been considered further in the past paper cited."

On this point we should note that our solution was again obtained for a completely open drain tube. This is never the case in practice where the drain openings are slits or holes in plastic tubing. Moreover the top one-half of the drain is sometimes covered with plastic film to prevent soil from filling the tubing. Thus all of the flow enters through the bottom of the drain in many field cases.

Kirkham (1957) has also developed solutions for parallel drain tubes in stratified soil. The reader is referred to the book **Drainage of Agricultural Lands**, J.N. Luthin, ed. for a complete discussion of these solutions. In the same reference Kirkham discussed solutions obtained by Luthin and Gaskell (1950) for the interesting case where the trench that was dug to install the tube is backfilled with surface soil which is more permeable than the underlying layer (Figure 3-6). They considered the specific case of a single drain in a profile with a top layer depth of 2 ft and determined the effect of flowrate of placing the drain at a 4 ft depth and backfilling with topsoil. They found that for drainage from a ponded surface placing the drain at the lower depth would increase the flowrate by less than 10 percent if K_1/K_2 was 5 or greater. This relatively small increase is somewhat surprising in view of the fact that the hydraulic head difference was doubled. However it should be remembered that these solutions are based on drainage from a ponded surface. Most modern drainage systems rely on surface drainage to remove surface water and subsurface systems to lower the water table. The effect of a more permeable backfill on the drainage rate during water table drawdown

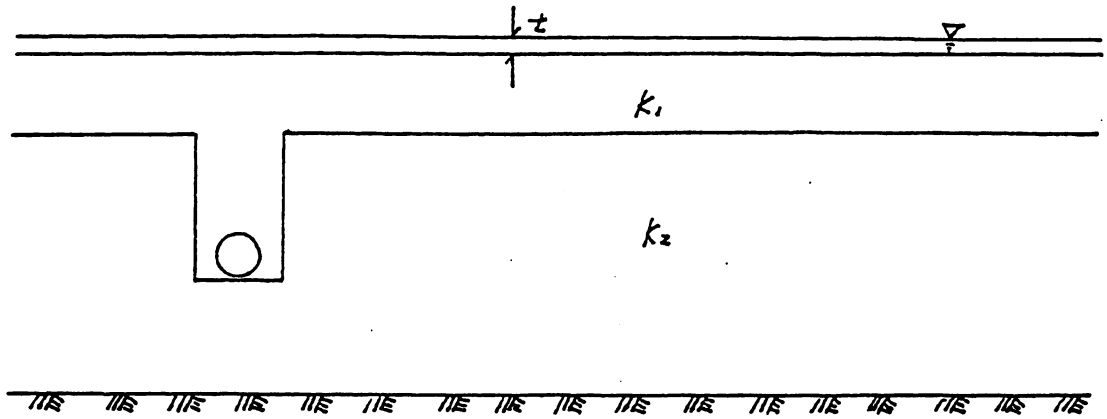

Figure 3-6 Tube drainage of a layered soil where the drainage trench is backfilled with more permeably surface material.

may be different than for ponded surfaces. This problem has also been considered by Luthin and his co-workers and will be discussed in a later section.

3.5. Flow to Real Drains

It was noted in the above section that the flow to drain tubes predicted by the theoretical equations is greater than would actually occur in the field because drains are never completely open as assumed. Rather, water enters the drain tubes through cracks at the end of tile joints, circular holes in the tube or slits in the present-day plastic tubing. The effect of a finite number and size of openings on inflow to drains was investigated in the late 1940's by Kirkham (1949) and Schwab and Kirkham (1951). They considered various size, number and arrangement of openings in the drain tube and analyzed the effect on drainage flowrate from a ponded surface to a single drain and for one case (Kirkham, 1949) to parallel drains.

For flow to a single open drain we found the flowrate to be (Section 3.3)

$$Q_o = 2\pi KD = 2\pi K \frac{t + d - s}{\ln \frac{2d}{r_d}} \tag{3.18}$$

For flow to a single drain with circular perforations, Kirkham and Schwab (1951) found (using method of images),

$$Q = \frac{2\pi K\,(t + d - s)}{C + \ln \dfrac{2d}{r_d}}$$

where

$$C = \frac{1}{m}\left\{ 2 \sum_{n=1}^{\infty} K_o\,(2n\pi\rho_p) + 2 \sum_{i=1}^{m-1} \left[\sum_{n=1}^{\infty} K_o\,(4n\pi\rho_w\, Sin\frac{\theta_i}{2})\right] + \ln\left(\frac{\rho_w}{\rho_p}\right) - \sum_{i=1}^{m-1} \ln\left(2\, Sin\frac{\theta_i}{2}\right)\right\} \qquad (3.19)$$

where m is the number of row of perforations, $\rho_p = r_p/a$, r_p = radius of perforations, $\rho_w = r_w/a$, θ_i = angle from horizontal of a row of perforations, r_w = radius of the drain, a = distance between perforations along the tube and K_o is the Bessel function of the second kind and zero order.

One method of treating the case for real drains is to define an effective radius of a real drain that will permit it to be treated as completely open. This can be done using equations (3.18) and (3.13) by substituting $r_d = r_e$ in equation (3.13). Bravo and Schwab (1975) used electric analog techniques to determine flowrates under radial flow conditions for tubes with various openings and for completely open tubes. They reported the ratios of the flowrates for real tubes to that of a completely open tube. These ratios can be used to define an effective radius for flow in the radial direction by using equations (3.6) where D is 1, a unit length of drain and R is the radius of the source. The effective radius for radial flow will be important for flow to real drains during water table drawdown as will be discussed in Chapter 5.

3.6. Ditch Drainage of Soil with Ponded Surface Underlain by Gravel

This problem is solved in the book **Advanced Soil Physics** by Kirkham and Powers (1972, pp. 99-110). It is included here as a demonstration of the method of separation of variables for solution of steady state drainage problems. The problem is shown schematically in Figure 3-7 below.

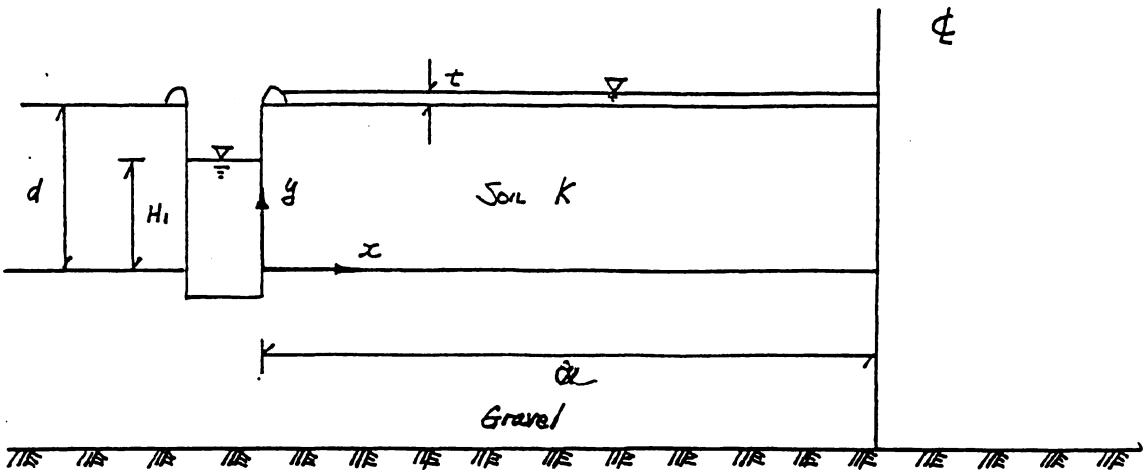

Figure 3-7 Drainage from a ponded surface to a ditch of a soil underlaid by gravel.

Saturated conditions exist everywhere in the flow domain so the G.P.D.E. is the Laplace equation, $\nabla^2 H = 0$ and the boundary conditions may be written as,

1. $\mathbf{H = H_1}$, $\mathbf{x = 0}$, $\mathbf{0 \leq y \leq H_1}$

   $\mathbf{H = y}$, $\mathbf{x = 0}$, $\mathbf{H_1 \leq y \leq d}$

2. $\mathbf{h = d + t}$, $\mathbf{0 < x \leq a}$, $\mathbf{y = d}$

3. $\dfrac{\partial H}{\partial x} = 0$, $\mathbf{x = a}$, $\mathbf{0 \leq y \leq d}$

4. $\mathbf{H = H_1}$, $\mathbf{0 \leq x \leq a}$, $\mathbf{y = 0}$

Let $\phi = H - H_1$, then $\nabla^2\phi = 0$ and the boundary conditions may be rewritten as,

1.	$\phi = 0$	,	$x = 0$	, $0 \le y \le H_1$
	$\phi = y - H_1$	,	$x = 0$	, $H_1 < y \le d$
2.	$\phi = d + t - H_1$	,	$0 < x \le a$	, $y = d$
3.	$\frac{\partial\phi}{\partial x} = 0$	,	$x = a$	, $0 < y \le d$
4.	$\phi = 0$	,	$0 \le x \le d$	, $y = 0$

In the method of separation of variables it is assumed that the solution is of the form, $\phi = X\,Y$, where $X = X(x)$, a function of only x, and $Y = Y(y)$, a function of y alone. Then,

$$\frac{\partial^2\phi}{\partial x^2} + \frac{\partial^2\phi}{\partial y^2} = 0$$

so,

$$Y\,\frac{d^2X}{dx^2} + X\,\frac{d^2Y}{dy^2} = 0$$

and,

$$-\frac{1}{X}\,\frac{d^2X}{dx^2} = \frac{1}{Y}\,\frac{d^2Y}{dy^2} \tag{3.20}$$

The right side of (3.20) is a function of Y alone and the left side a function of X alone, so if they are equal, both sides must be equal to a constant, λ.

$$\frac{1}{X}\,\frac{d^2X}{dx^2} = 0$$

so,

$$X = C_1\,x + C_2 \tag{3.22}$$

likewise,

$$Y = C_3\,y + C_4 \tag{3.23}$$

But $\phi = 0$ when $y = 0$ from B.C. 4. Thus $Y = 0$ for $y = 0$; otherwise $X = 0$ for $y = 0$ and hence all y, since X is not a function of y, and a trivial solution, $\phi = 0$, would result. Therefore $C_4 = 0$.

$$\phi = XY \quad \text{so } \partial\phi/\partial x = Y\, dX/dx = C_1 Y.$$

But $\partial\phi/\partial x = 0$ at $x = a$, so $C_1 = 0$. Otherwise $Y \equiv 0$ and trivial solution.

Therefore the solution obtained for $\lambda = 0$ is,

$$\phi = C_2\, C_3\, y = C\, y$$

When $y = d$, $\phi = d + t - H_1$ so we can solve for the constant C, $C = (d + t - H_1)/d$ and,

$$\phi = \frac{d + t - H_1}{d}\, y \tag{3.24}$$

is a solution to the G.P.D.E. that fits the boundary conditions. However it does not adequately quantify ϕ at all of the boundaries so (3.24) is not a complete solution.

Now consider λ positive. Let $\lambda = +\alpha^2$

$$-\frac{1}{X}\frac{d^2X}{dx^2} = \alpha^2 \tag{3.25}$$

or

$$\frac{d^2X}{dx^2} + \alpha^2 X = 0$$

which has the general solution (from ordinary differential equations) of

$$X = A\, e^{i\alpha x} + B\, e^{-i\alpha x} \tag{3.26}$$

where $i = \sqrt{1}$ and A and B are constants. (3.26) may be written as,

$$X = A\,(\cos \alpha x + i \sin \alpha x) + B\,(\cos \alpha x - i \sin \alpha x)$$

or,

$$X = D \cos \alpha x + E \sin \alpha x \tag{3.27}$$

where D and E are constants, $D = A + B$ and $E = Ai - Bi$. From B.C. 3, $\partial\phi/\partial x = 0$ at $x = a$. But $\partial\phi/\partial x = Y\, dX/dx$

$$dX/dx = D\alpha \sin \alpha x + E\alpha \cos \alpha x = 0$$

Therefore $$- D\alpha \sin \alpha a + E\alpha \cos \alpha a = 0$$

and $E = D \dfrac{\sin \alpha a}{\cos \alpha a}$

The solution for X may then be written,

$$X = D \left[\cos \alpha x + \frac{\sin \alpha a}{\cos \alpha a} \sin \alpha x \right] \tag{3.28}$$

For Y we have

$$\frac{d^2Y}{dy^2} - \alpha^2 Y = 0 \tag{3.29}$$

which has the general solution

$$y = F e^{\alpha y} + Ge^{-\alpha y}$$

but $\phi = 0$ when $y = 0$, so $Y = 0$ when $y = 0$

and $0 = F + G$, $G = -F$

$$Y = F e^{\alpha y} - F e^{-\alpha y}$$

$$Y = 2 F \sinh \alpha y \tag{3.30}$$

Thus a set of solutions is obtained for $\lambda = \alpha^2$ which may be written as,

$$\phi = XY = C \sinh \alpha y \cos \alpha(a-x) \tag{3.31}$$

where C and α are arbitrary constants.

Next we must consider the solutions obtained when $\lambda = -\alpha^2$. Then

$$-\frac{1}{X}\frac{d^2X}{dx^2} = \alpha^2$$

and $$X = D_3 e^{\alpha x} + D_4 e^{-\alpha x}$$

Also $$\frac{1}{Y}\frac{d^2Y}{dy^2} = -\alpha^2$$

so $$Y = D_5 \cos \alpha y + D_6 \operatorname{Sin} \alpha y$$

However $\phi = 0$ when $y = 0$, so $Y = 0$ when $y = 0$ and $D_5 = 0$.

$$\mathbf{Y = D_6 \, Sin \, \alpha y} \tag{3.33}$$

$$\text{At } x = a, \quad \frac{\partial \phi}{\partial x} = 0 \qquad so \quad \frac{dX}{dx} = 0 \qquad at \; x = a.$$

From (3.32) $$\frac{dX}{dx} = D_3 \, \alpha e^{\alpha x} - D_4 \, \alpha e^{-\alpha x}$$

$$\mathbf{0 = D_3 \, \alpha \, e^{\alpha a} - D_4 \, \alpha e^{-\alpha a}}$$

so $$\mathbf{D_4 = D_3 \, e^{2\alpha a}}$$

and $$\mathbf{X = D_3 \, (e^{\alpha x} + e^{2\alpha a} \, e^{\alpha x})} \tag{3.34}$$

Let $D_3 = D_7 \, e^{-\alpha a}$ where D_3 and D_7 are arbitrary constants. Then we can write,

$$\mathbf{X = D_7 \; (e^{\alpha(x-a)} + e^{-\alpha(x-a)})}$$

or $$\mathbf{X = D_8 \, cosh \, \alpha \, (x - a)} \tag{3.35}$$

Combining equations (3.33) and (3.35) we obtain another set of solutions.

$$\mathbf{\phi = XY = D \; Cosh \, \alpha \, (x\text{-}a) \; Sin \, \alpha y} \tag{3.36}$$

A general solution may then be written by using the principle of superposition.

$$\phi = \frac{d + t - H_1}{d} \, y + \sum_{m=1}^{\infty} C_n \; Sinh \, \alpha_n \, y \; Cos \, \alpha_n \, (a - x)$$

$$+ \sum_{m=1}^{\infty} D_m \; Cosh \, \alpha_m (x\text{-}a) \; Sin \, \alpha_m \, y \tag{3.37}$$

Now check the boundary conditions. A $y = 0$, $\phi = 0 + \Sigma 0 + \Sigma 0 = 0$, so B.C. 4 is satisfied. Differentiating term by term we obtain,

$$\frac{\partial\phi}{\partial x} = \sum_{n=1}^{\infty} C_n \alpha_n \, Sin \, \alpha_n (a-x) + \sum_{m=1}^{\infty} D_m \alpha_m \, Sinh \, \alpha_m (x-a) \, Sin \, \alpha_m Y.$$

So at x = a, $\frac{\partial\phi}{\partial x} = 0$ as Sin 0 = 0 and Sinh 0 = 0.

Therefore B.C. 3 is satisfied. From B.C. 2, $\phi = d + t - H_1$ at y = d.

Therefore

$$\phi = \frac{d + t - H_1}{d} d + \sum_{n=1}^{\infty} C_n \, Sinh \, \alpha_n d \, Cos \, \alpha_n (a-x)$$

$$+ \sum_{m=1}^{\infty} D_m \, Cosh \, \alpha_m (x-a) \, Sin \, \alpha_m d = d + t - H_1$$

This equation will hold if

$$\sum_{n=1}^{\infty} C_n \, Sinh \, \alpha_n d \, Cos \, \alpha_n (a-x) = 0 \qquad (3.38)$$

and

$$\sum_{n=1}^{\infty} D_m \, Cosh \, \alpha_m (x-a) \, Sin \, \alpha_m d = 0 \qquad (3.39)$$

For (3.38) to be true for all x, either $\alpha_n = 0$ or $C_n = 0$ for all N. In either case the sum given in (3.38) would drop out of the solution. The sum (3.39) will hold for $\alpha_m = m\pi/d$, m = 1, 2, 3,..... Then at y = d, $\phi = d + t - H_1$ which satisfies B.C. #2, and the general solution is,

$$\phi = \frac{d + t - H_1}{d} y + \sum_{m=1}^{\infty} D_m \, Cosh \, \frac{m\pi}{d} (x-a) \, Sin \, \frac{m\pi}{d} Y$$

Now choose D_m to fit the remaining boundary condition:

$$\phi = 0 \quad , \quad 0 < y < H_1 \quad , \quad x = 0.$$

$$\phi = Y - H_1 \quad , \quad H_1 < y < d \quad , \quad x = 0$$

This boundary condition may be written as, $\phi = f(y)$ for $x = 0$. Where $f(y) = 0$ for $0 < y < H_1$ and $f(y) = y - H_1$ for $H_1 < y < d$. Then substituting into (3.40) we obtain,

$$f(y) = \frac{d + t - H_1}{d} y + \sum_{m=1}^{\infty} D_m \, Cosh \frac{m\pi a}{d} \, Sin \frac{m\pi}{d} y$$

But D_m Cosh $\frac{m\pi a}{d}$ is another set of constant, say E_m. So,

$$f(y) = \frac{d + t - H_1}{d} y + \sum_{m=1}^{\infty} E_m \, Sin \frac{m\pi}{d} y \tag{3.41}$$

Let

$$g(y) = f(y) - \left(\frac{d + t - H_1}{d}\right) y = \sum_{m=1}^{\infty} E_m \, Sin \frac{m\pi}{d} y$$

where

$$g(y) = \frac{H_1 - d - t}{d} y \quad for \quad 0 < y < H_1$$

and

$$g(y) = \frac{H_1 - t}{d} y - H_1 \quad for \quad H_1 < y < d$$

The series in (3.42) will be recognized by the student as a Fourier series expansion of the function g(y). All that remains is to use the techniques of Fourier series analysis to determine the values of the constants E_m that will make (3.42) hold for our function g(y).

Multiply each side of (3.40) by $\text{Sin}\ \frac{n\pi}{d}\ y$, which is known to be orthogonal with

and $\text{Sin}\ \frac{m\pi}{d}\ y$ integrate from y = 0 to d

$$\int_0^d g(y)\ Sin\ \frac{n\pi}{d}\ y\ dy = \Sigma\ E_m \int_0^d Sin\frac{n\pi}{d}\ y \cdot Sin\ \frac{m\pi}{d}\ y\ dy$$

For

$$n \neq m,\ \int_0^d Sin\ \frac{n\pi}{d}\ y\ Sin\ \frac{m\pi}{d}\ y\ dy = 0$$

The student should show this is true.

For

$$n = m,\ \int_0^d Sin^2\ \frac{m\pi y}{d}\ dy = \frac{d}{2}\ \therefore E_m\ \frac{d}{2} = \int_0^d g(y)\ Sin\ \frac{n\pi}{d}\ y\ dy$$

and

$$E_m = \frac{2}{d}\int_0^d g(y)\ Sin\ \frac{n\pi}{d}\ y\ dy$$

$$E_m = \frac{-2d}{m^2\pi^2}\ Sin\ \frac{m\pi H_1}{d} + \frac{2t}{m\pi}\ Cos\ m\ \pi$$

$$D_m = \frac{-1}{\cosh\frac{m\pi a}{d}}\left[\frac{2d}{m^2\pi^2}\ Sin\ \frac{m\pi H_1}{d} - \frac{2t}{m\pi}\ \cos\ m\ \pi\right]$$

$$H = H_1 + \frac{d+t-H_1}{d}\ y + \sum_{m=1}^{\infty} D_m \cosh\ \frac{m\pi}{d}\ (x-a)\ Sin\ \frac{m\pi}{d}\ y$$

PROBLEMS

3.1 For example 1 attached, find Q and I_e (exit gradient) if K = 5 cm/hr and D = 25 ft.

3.2 For examples 3 and 4, find Q and I_e . Note the flownets are drawn for symmetrical situations in both cases. Assume the upstream water depth D = 40 ft. Assume K = 1 in/hr for both cases.

3.3 Solve the same problem as given in example 2 with a 70 ft. impermeable blanket on the upstream side.

3.4 Solve the problem in example 4 for a 60 ft. upstream blanket. Also for a 120 ft. upstream blanket. Plot Q/K vs. L, the length of the wier.

3.5

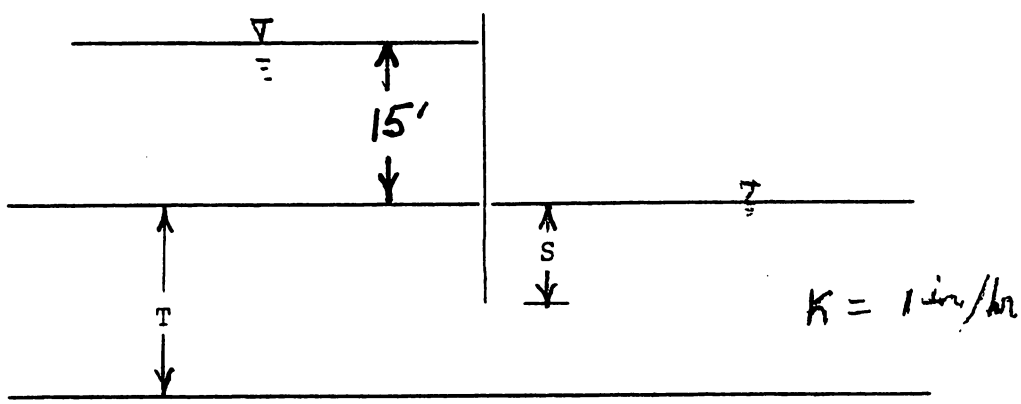

Find Q for a) T = 20'
S = 10'

b) T = 20'
S = 1'

c) T = 20'
S = 0'

EXAMPLE #1

FLOW NET SOLUTIONS

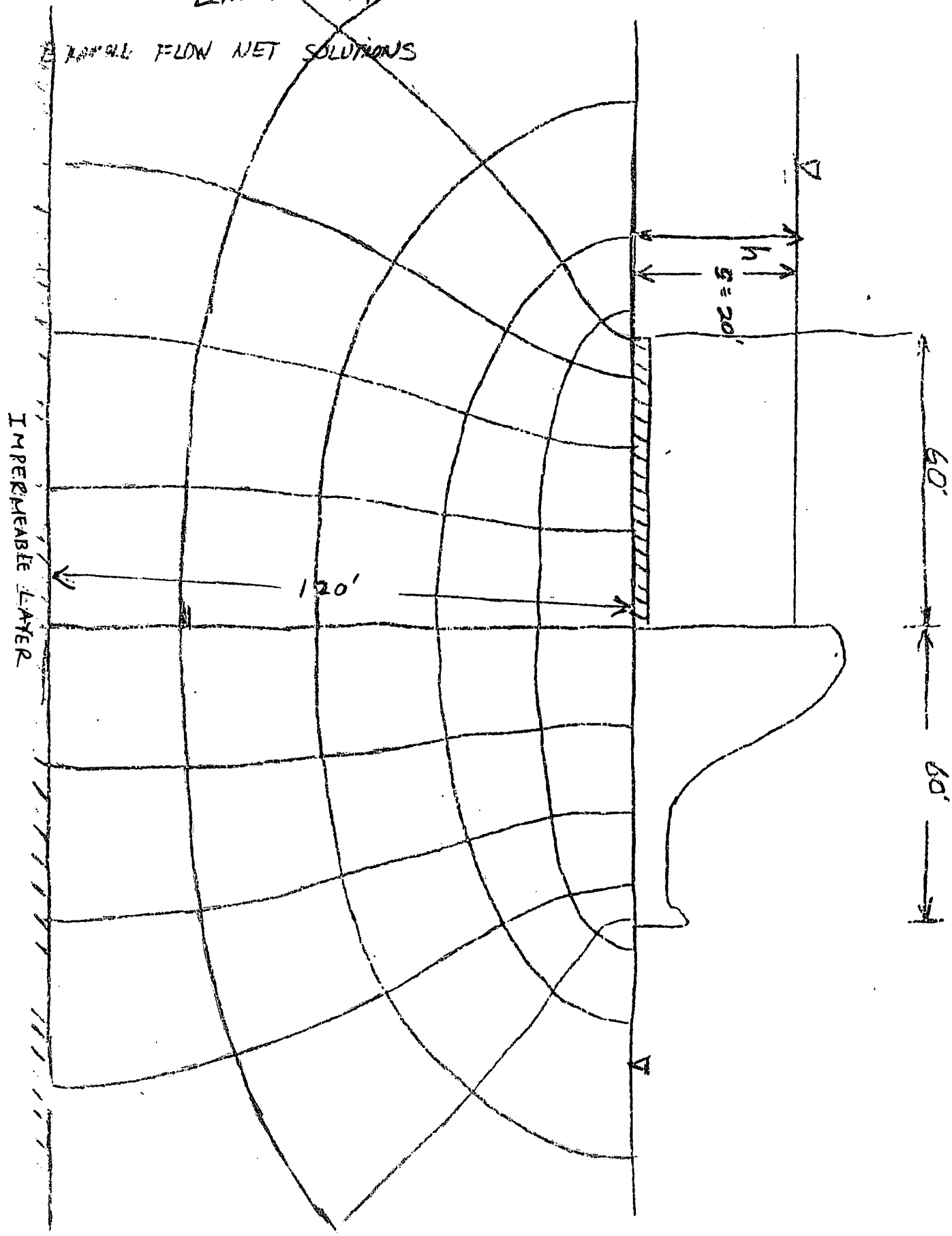

Example No.2

Given: Conditions shown in sketch

Find: Flow rate, and exit gradient

If D = 20.0 ft and K = 0.5 in/hr

Solution: First Draw Flownet

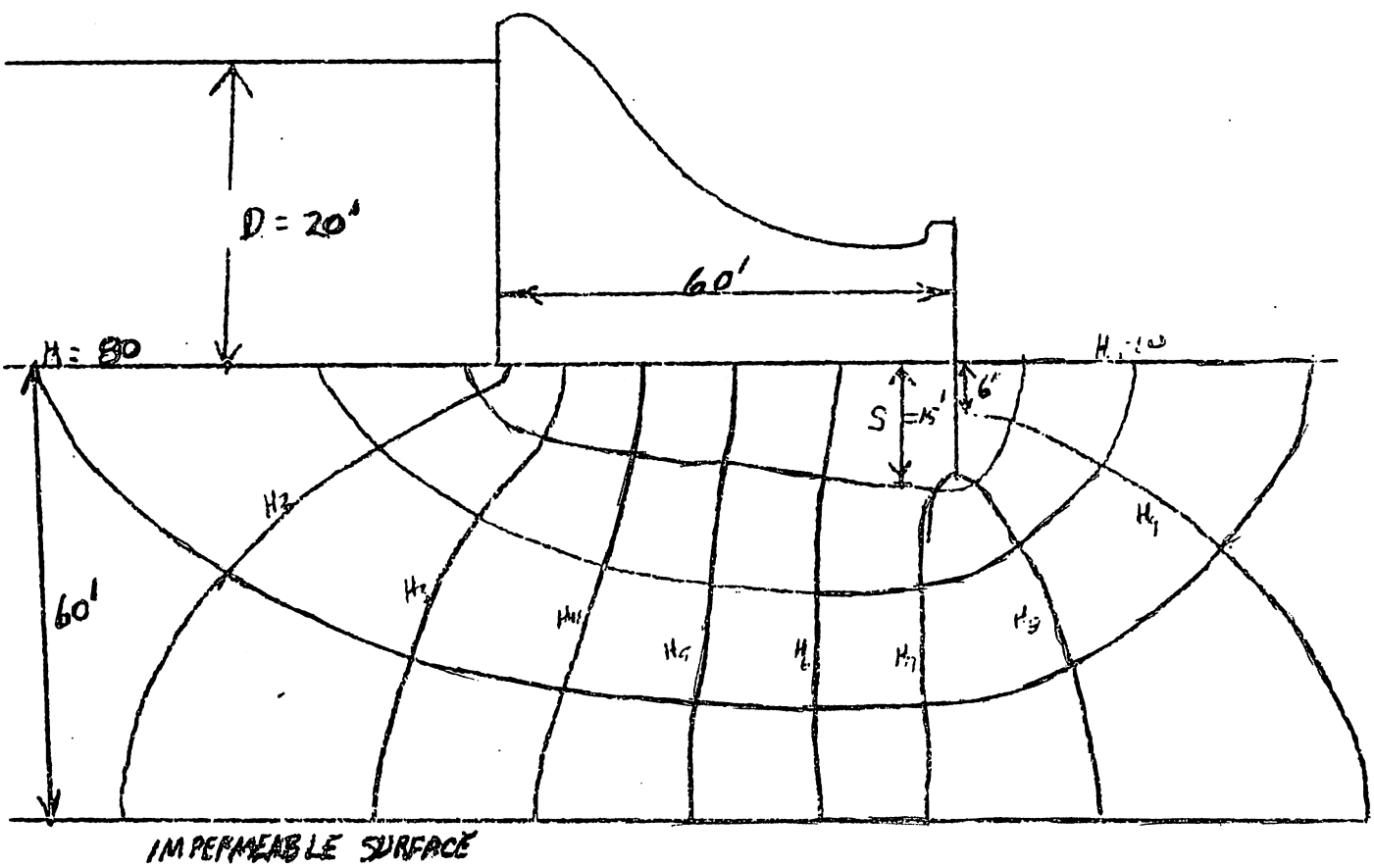

$N_e = 9$ $\quad N_f = 4$ $\quad \Delta H = -20'$

$$Q = -K \frac{N_f}{N_e} \Delta H = 0.5 * \frac{4}{9} * 20 = 4.44 \ \frac{Ft^3}{hr \cdot Ft}$$

$$H_4 = 60 + \frac{20}{9} = 60 + 2.22 = 62.22$$

$$\therefore I_e = \frac{2.22}{6} = 0.37 \ \frac{Ft}{Ft}$$

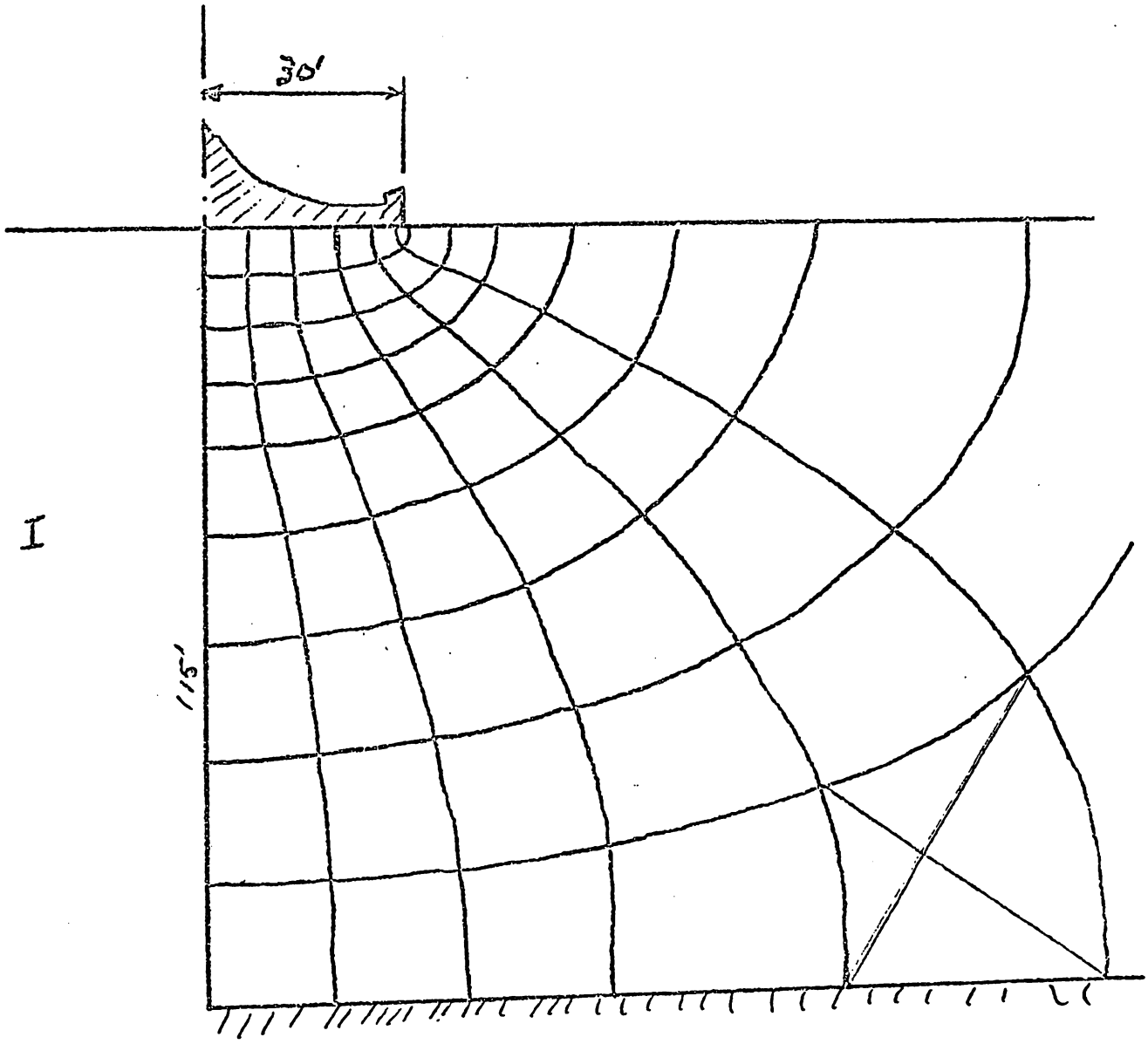

Fig I

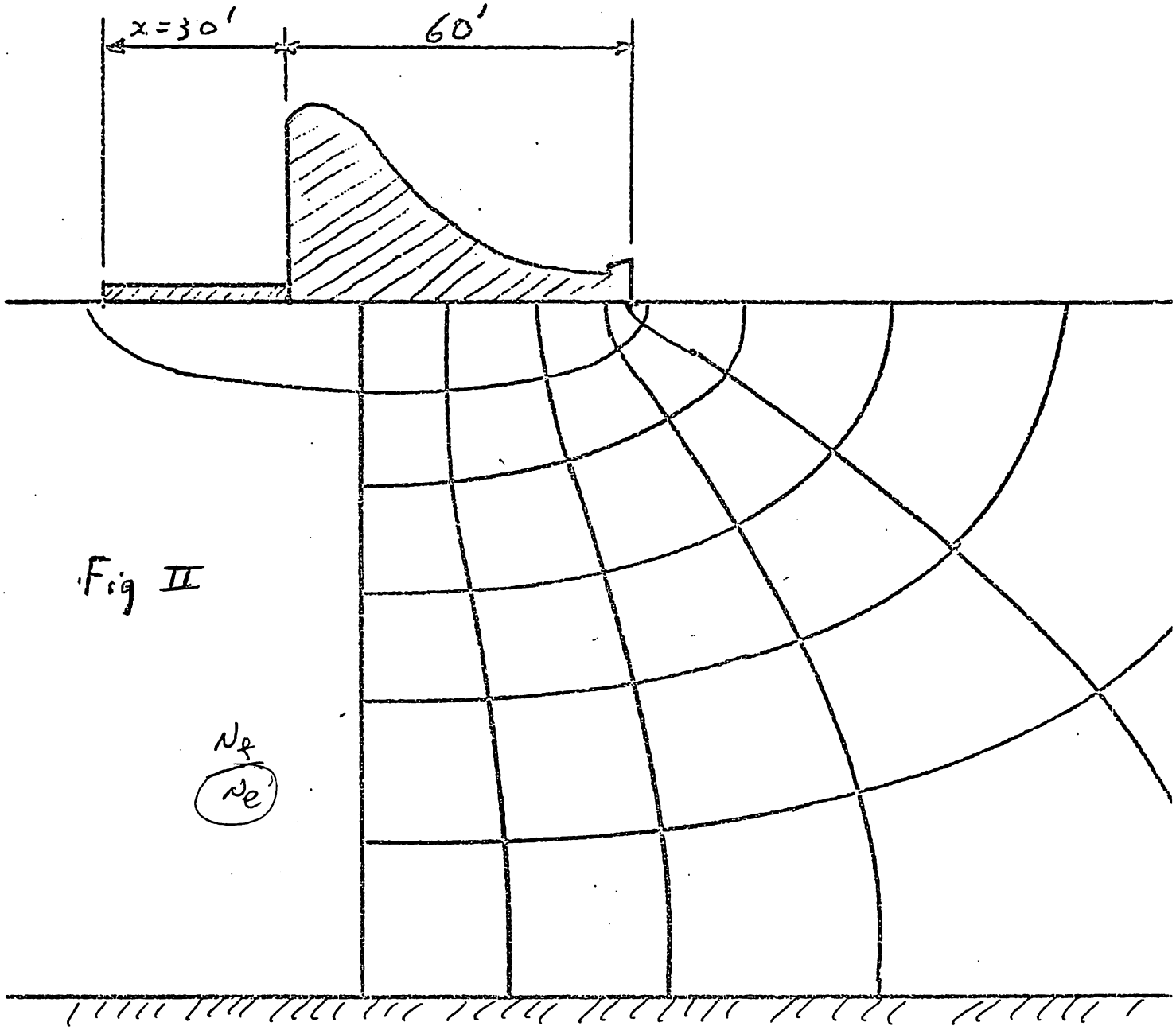
x=30'
60'
Fig II
N_f
N_e

3.6.

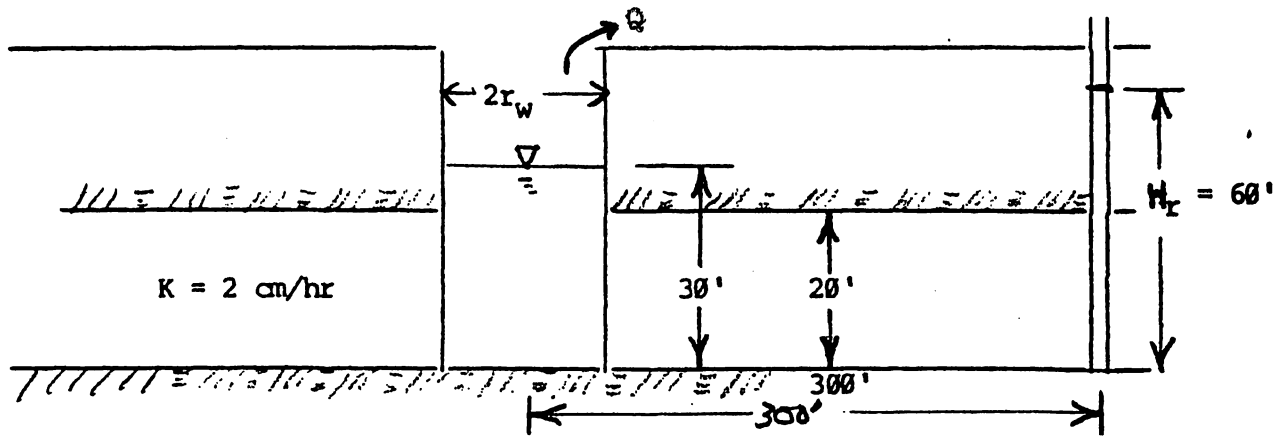

The hydraulic head at r = 300 ft. is constant at H_r = 60 ft. and the water level in the well is constant at H_w = 30 ft. (a) Determine the steady state pumping rate if the well diameter is $2r_w$ = 6 in. (b) Plot Q vs. r_w for r < 12 in. (c) For r_w = 6 in. plot the flow net using the analytical solutions obtained in class.

3.7 A single 10 cm diameter drain tube is installed in a soil with a very deep impermeable layer. The hydraulic conductivity is 4 cm/hr and the tube is placed at a depth of 1.2 m. The drain flows half full with no back pressure. Water is ponded on the soil surface at a 2 cm depth. Assuming no reduction in flow due to walls of the drain, find (a) the flow rate, (b) the flow entering the surface within a lateral distance of 15 m on either side of the drain, (c) the hydraulic head at the following coordinates (x,y) (where the (0.5,0.0), (1.0,0.0), (2.0,0.0).

3.8 For problem 3-7, plot the flow rate versus drain diameter, D, for 5 cm < D < 30 cm.

3.9 A single 6-inch diameter drain tube is placed at a depth of 4 ft in a very deep clay loam soil with K = 1.5 in/hr. The drain tube has circular holes equally spaced such that there are 30 holes/ft. The holes are 0.5 in. in diameter. If water is ponded on the soil surface to a depth of 0.5 in., find the flowrate from the drain tube. What is the equivalent diameter of a drain tube which is completely open and thus has no restrictions due to the finite size of the holes in the tube?

3.10 Repeat problem 3-9 for a 3-inch diameter drain tube.

3.11 Repeat problem 3-9 for a tube placed 8 ft. below the surface.

3.12 The following solution was proposed for saturated flow in a soil.

$$\Phi = KH = x^3/3 - y^2x$$

Is this a solution to the governing equation? If so, find the expression for the stream function, $\psi(x,y)$.

3.13 Repeat 3-12 for $\phi = \sinh x/y + \text{Cosh } x/y$.

3.14 For the ditch drainage problem shown below find H for the following x and y coordinates.

x	1 m	2 m	5	1	5	1	5
y	0	0	0	0.5	0.5	1.0	1.0

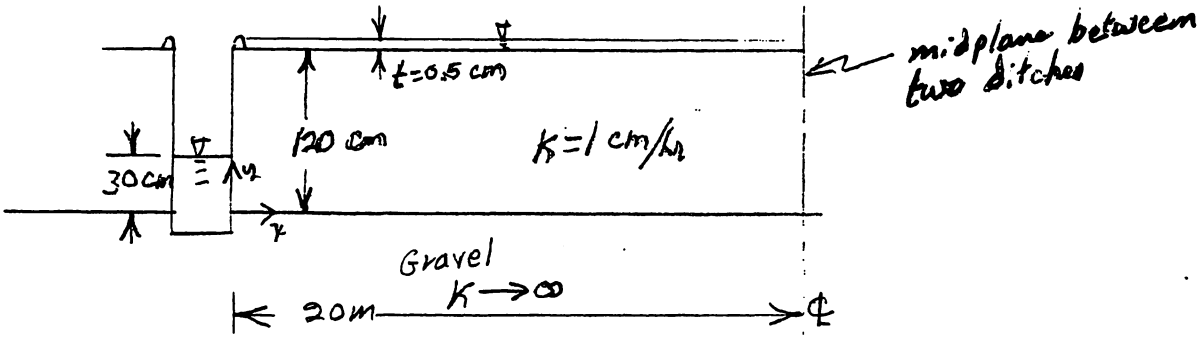

Find the flowrate, Q, into the ditch.

3.15 Find H at the following x and y coordinates for the parallel tile drains given below. The drains flow half-full. Also find the flowrate, Q.

x	0	0.50 m	1.0	10	10
y	.50 m	0	0	0	0.5

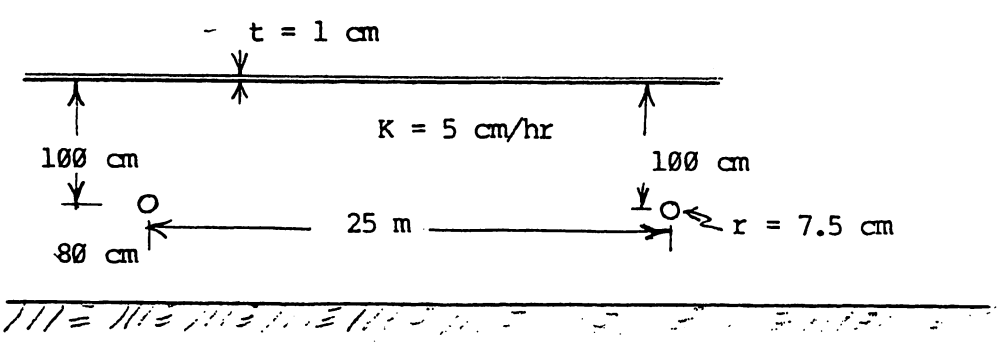

1. Show

3.16 For a drain flowing full with no back pressure, show that Eq. 3-17 on page 13 reduces to Eq. 3-13 on page 11. Note that D in Eq. 3-13 is:

$$D=\frac{t+d-s}{\ln\frac{2d}{r_d}},$$

while D in Eq. 3-15 and Figure 3-5 is the same as d in Figure 3-4.

3.17 For problem 3-7 plot flowrate, Q, versus drain depth as the depth increases from 0 to 3 m.

3.18 How much of the flow in problem 3-15 enters the soil surface between (a) x = ± 1 m?;
(b) ± 2 m?; (c) ± 5 m of the drain.

3.19 For a single drain in an infinitely deep soil, plot Q_x/Q_t versus x/d, where Q_x is the rate of flow that enters the soil surface between x = 0 and x, and Q_t is the total rate of flow entering between x = 0 and x = ∞. Note that $Q_t = \pi KD$ where $D=\frac{t+d-s}{\ln\frac{2d}{r_d}}$.

And that $Q_t = 2\pi KD$ (Eq. 3-13) for flow from both sides (all x from - ∞ to + ∞).

3.20 For problem 3-15, plot Q vs. drain depth for depths varying from 0 to 1.8 m.

3.21 Find the flowrate in problem 3-15 for an infinite drain spacing; i.e., L →∞ in Eq. 3-16. Compare this solution with the flowrate obtained using Eq. 3-13 (which is valid for an infinitely deep soil, but theoretically not for this case where depth to the impermeable layer is 1.8m).

3.22 Use Eq. 3-13 to estimate flow rate and repeat problem 3-20. Compare the plot with the correct one obtained in Eq. 3-20.

3.23 Using the method of fragments, determine Q/K and the exit gradient for

(a) h = 10 ft, T = 30 ft.
(b) h = 10 ft, T = 60 ft.
(From Harr, 1962)

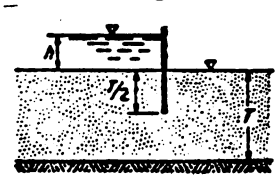

3.24 For the section shown below obtain plots of (a) the reduced quantity of seepage (Q/K) and (b) the exit gradient. Assume $0 \leq A \leq 75$ ft.

3.25 If A = 25 ft, obtain the pressure distribution along the base of the structure.

3.26 A 100 mm diameter drain has 4 rows of holes. The holes are rectangular in cross-section 3.0 mm wide and 20 mm long. They are spaced 50 mm apart long the length of the tube. A single drain is bured 1.5 m deep in a deep soil having a K of 0.5 m/day. What is the flow rate?

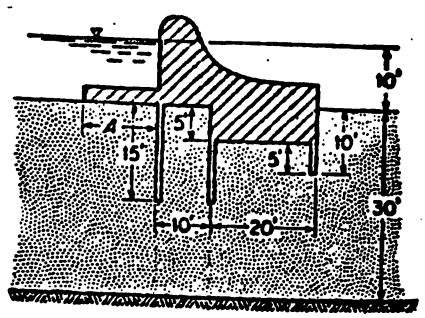

CHAPTER 4

Steady Flow—The Dupuit-Forchheimer Approximations

CHAPTER 4

STEADY FLOW - THE DUPUIT-FORCHHEIMER APPROXIMATIONS

Flow situations we have considered up to now have been primarily confined flow. That is, we have dealt with mostly saturated systems which have been carefully defined such that all boundary conditions were known. In nature, the flow of water in soil is frequently unconfined. In unconfined flow, at least one boundary of the flow domain is represented by a free surface, the position of which is usually unknown. When saturated flow is considered and Richards equation is used as the G.P.D.E., the terms confined and unconfined flow lose meaning because flow both above and below the water table is considered. However it is useful to approach some of these situations as saturated-unconfined flow problems. The Dupuit-Forchheimer (D-F) assumptions are approximations that allow us to considerably simplify solutions to these problems.

For many unconfined flow situations, especially for shallow soils, the direction of flow is approximately horizontal. It follows that the equipotential lines for these cases are approximately vertical. For these situations the following assumptions, attributed to Dupuit (1863) and Forchheimer (1922) are useful in characterizing the flow:

1. For situations in which the free surface has a small slope, the streamlines may be assumed to be horizontal and the equipotential lines vertical.

2. Under those conditions, the hydraulic gradient is equal to the slope of the free surface.

4.1. Flow Between Two Reservoirs

Use of the D-F assumptions is illustrated by the situation in Figure 4.1. Because we assume the equipotential lines are vertical, the distance from the datum to the free surface at any point, y, along the vertical equipotential. This can be seen by considering a point at the free surface, y = h, where p = 0 and H = h. Then at all points along the vertical equipotential H = h, the distance to the free surface. By convention the term, h, is used for the distance to the free surface. This is somewhat confusing because the same symbol, h, used to denote pressure head in the previous chapters. Such inconsistencies are not uncommon in the literature however. From Darcy's Law $q_x = -K\, dH/dx = -K\, dh/dx$ where dh/dx is the slope of the free surface. While q is a function of x, q = q(x), it is constant for all y because dh/dx is assumed to be the same for all values of y at any x. Therefore the flow through a plane at any x may be expressed as,

$$Q = -Kh\frac{dh}{dx} \tag{4.1}$$

where Q is the flowrate per unit length of the canal. If no water enters or leaves the region below the water table via vertical flow such as rainfall or evapotranspiration (ET), the flowrate, Q, will be constant at all x and the shape of the water table can be defined by integrating equation (4.1).

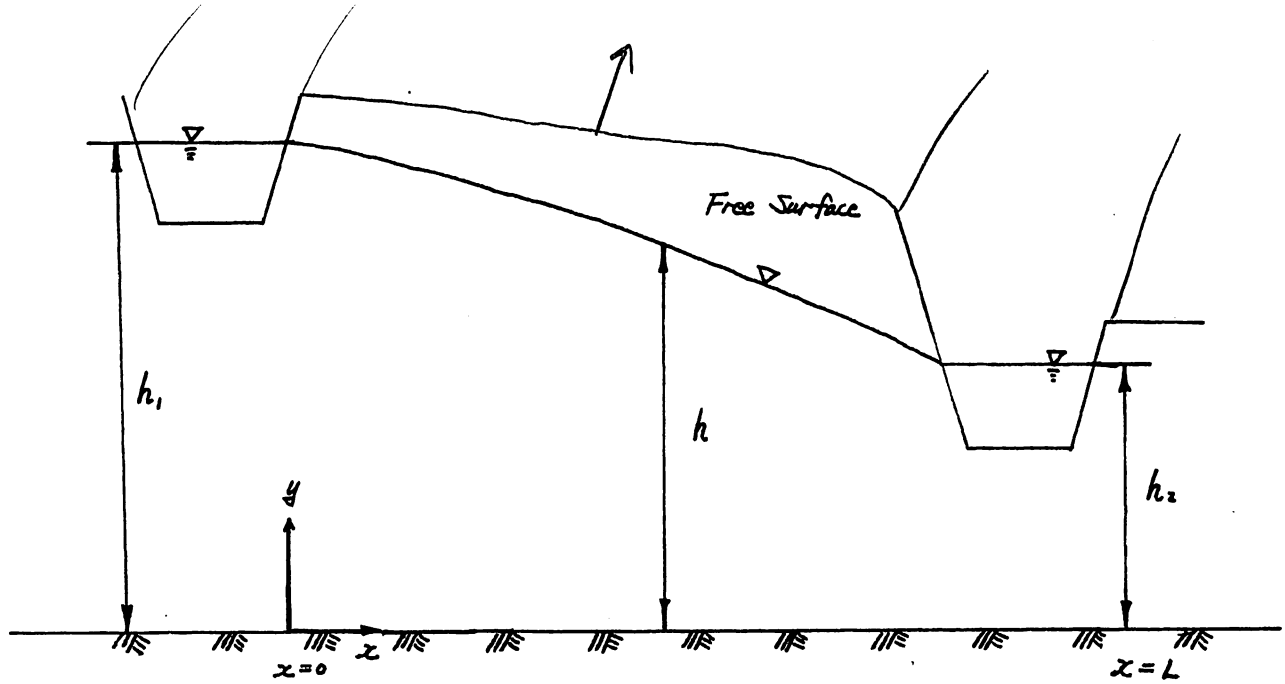

Figure 4-1. Steady flow between canals.

$$Q = -\frac{K}{2}\frac{dh^2}{dx}$$

$$h^2 = -\frac{2Q}{K}x + C \tag{4.2}$$

But $h = h_1$ at $x = 0$ and $h = h_2$ at $x = L$. Therefore,

$$h_1^2 = C$$

and

$$Q = \frac{K}{2L}(h_1^2 - h_2^2) \tag{4.3}$$

Then the equation for the free surface may be written,

$$h^2 = -\frac{h_1^2 - h_2^2}{L} x + h_1^2 \tag{4.4}$$

Therefore under the D-F assumptions, the water table shape will be parabolic and the flowrate is given in equation (4.3).

4.2. Steady Flow Between Reservoirs with Vertical Losses or Additions

Consider the situation in Figure 4-2 which is identical to that shown in Figure 4-1 but with steady infiltration from rainfall at the surface at rate R.

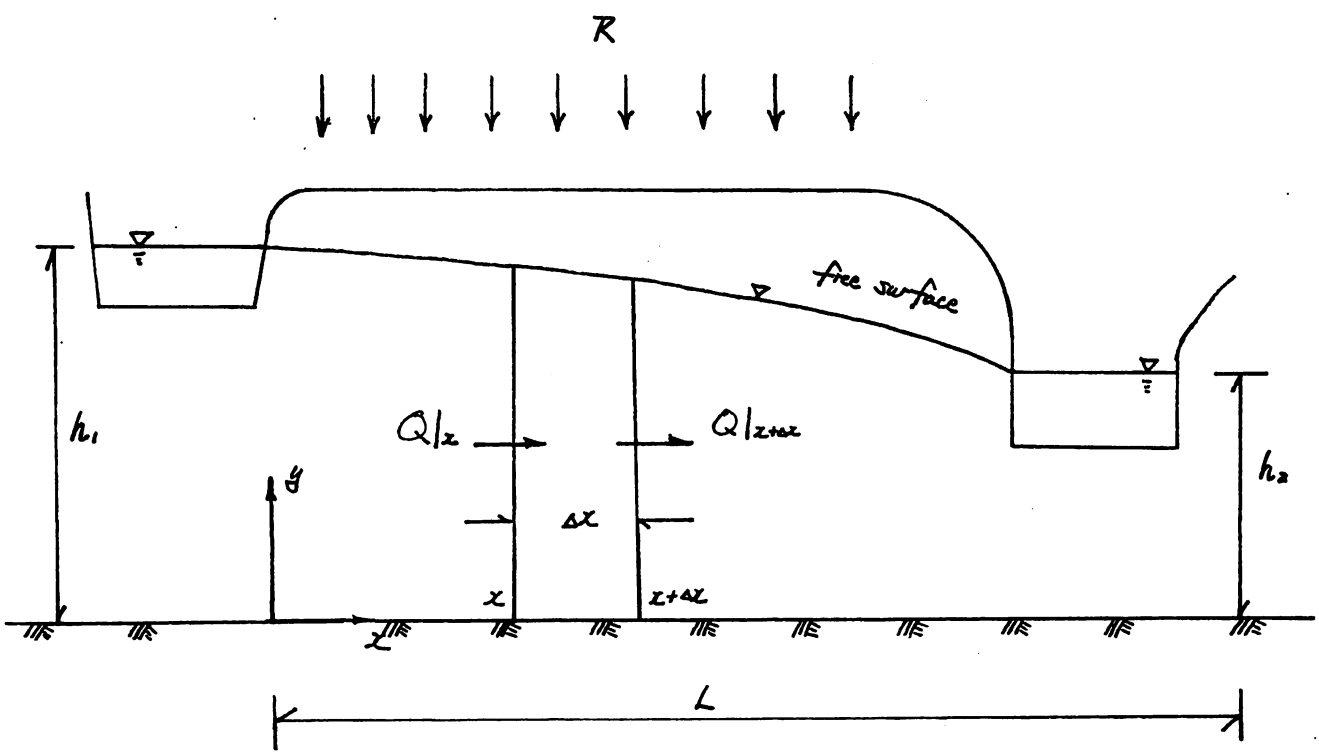

Figure 4-2.

A mass balance on a small volume of width Δx gives the following relationship.

$$Q|_x + R\Delta x = Q|_{x+\Delta x}$$

Therefore $\frac{dQ}{dx} = R$ (4.5)

Substituting equation (4.1) gives,

$$\frac{d}{dx}\left[h\frac{dh}{dx}\right] = -R/K$$

(4.6)

or

$$\frac{d^2h^2}{dx^2} = -\frac{2R}{K}$$

(4.7)

Direct integration of (4.7) subject to boundary conditions $h = h_1$ at $x = 0$ and $h = h_2$ at $x = L$ yields,

$$h^2 = -\frac{R}{K}x^2 + \left(\frac{h_2^2 - h_1^2 + \frac{R}{K}L^2}{L}\right)x + h_1^2$$

(4.8)

The position of the free surface can be evaluated from equation (4.8). Note that it reduces to (4.4) for $R = 0$. The flowrate at any point can be obtained by differentiating (4.8) and substituting into (4.1).

$$Q = -Kh\frac{dh}{dx} = Rx - \frac{K\left(h_2^2 - h_1^2\right) + R\,L^2}{2L} \tag{4.9}$$

Also note that (4.9) reduces to (4.3) for R = 0 as it should.

4.3 D-F Flow with Inclined Impervious Layer

Lateral flow above an inclined impermeable layer can be analyzed using the D-F assumptions as long as the slope of the impermeable boundary is small. For the situation shown in Figure 4-3, the D-F assumptions lead to the

$$y = f(x)$$

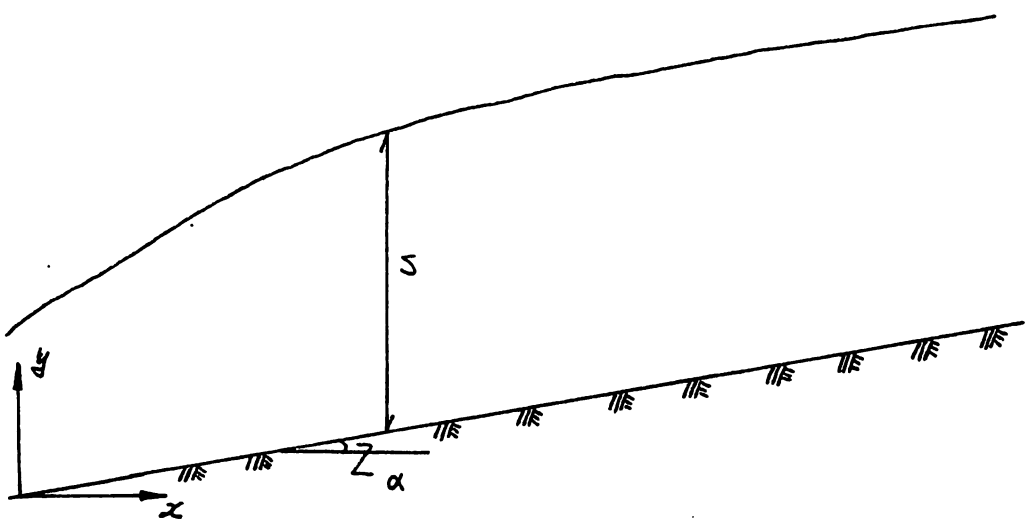

Figure 4-3. Flow above an inclined impermeable layer.

following expression for flux.

$$q = -K \frac{dy}{dx} \tag{4.10}$$

and for the flowrate,

$$Q = -KS \frac{dy}{dx} \tag{4.11}$$

But $s = y - x \tan \alpha$

$$\text{So } Q = -K (y - x \tan \alpha) \frac{dy}{dx} \tag{4.12}$$

$$\frac{dx}{dy} = \frac{-K(y - x \tan \alpha)}{Q}$$

Assuming no gains or losses of water vertically due to rainfall, ET, or deep seepage, the flowrate is constant for all x (conservation of mass). Then

$$\frac{dx}{dy} - \frac{K\, x \tan \alpha}{Q} + \frac{K}{Q} y = 0 \tag{4.13}$$

This O.D.E. is of the familiar form

$$\frac{dx}{dy} + f(y)\, x + g(y) = 0$$

and has the general solution

$$x = \frac{y}{\tan\alpha} + \frac{Q}{k \tan^2 \alpha} - \frac{C}{\tan\alpha} e^{\frac{K y \tan \alpha}{Q}}$$

(4.14)

The solution has two constants, Q and C, which must be evaluated from the boundary conditions or from measured y at two positions of x. That is, by knowing two points on the free surface we can find Q and C and thus define the shape of the surface. Equation (4.14) may be rewritten as,

$$y - x \tan \alpha = Ce^{\frac{K y \tan \alpha}{Q}} - \frac{Q}{K \tan \alpha}$$

(4.15)

Where the left side is equal to the distance of the free surface above the impermeable layer, h. If C = 0 in (4.15) we have a particular solution,

$$y - x \tan \alpha = \frac{-Q}{k \tan \alpha}$$

(4.16)

and $$Q = -h_o K \tan \alpha \qquad (4.17)$$

where $h_o = y - x \tan \alpha$.

The flow in this case is called uniform flow and is analogous to uniform flow in open channels in that it occurs for long reaches where the slope of the free surface approaches that of the impermeable layer asymptotically. The depth of flow is called

the normal depth, $h_o = y - x \tan \alpha$ and $Q = -K h_o \tan \alpha$. For further reference h_o is defined as $h_o = -Q/K \tan \alpha$.

Harr (1962) discusses three cases for flow above an inclined impermeable boundary. The three situations depend on the orientation of the impervious boundary and the relative headwater and tailwater elevations. The three cases are discussed briefly below.

If $\tan \alpha > 0$ and $C > 0$ the free surface will lie entirely above the normal depth (i.e. $y - x \tan \alpha > h_o$). This is shown in Figure 4-4a) and is called a "rising surface". If $\tan \alpha > 0$ and $C < 0$ the free surface will lie completely below the normal depth line and a "falling surface" results. For reverse slopes $\tan \alpha < 0$ and h_o is negative. The result is a falling surface which is parabolic in shape with one branch of the parabola asymptotically approaching the negative h_o but having no physical significance.

If two points on the free surface $(x_1, y_1)(x_2,y_2)$ are known, we can solve for C and Q and thus determine both the flowrate and the position of the free surface. From equation (4.15),

$$y_1 - x_1 \tan \alpha + \frac{Q}{K \tan \alpha} = Ce^{\frac{K y_1 \tan \alpha}{Q}} \tag{4.18}$$

but $$Q = -K h_o \tan \alpha$$

Therefore $$K \tan \alpha / Q = -1/h_o$$

so $\quad y_1 - x_1 \tan\alpha - h_o = Ce^{-y_1/h_o}$

and $\quad y_2 - x_2 \tan\alpha - h_o = Ce^{-y_2/h_o}$

Then $\quad C = (y_1 - x_1 \tan\alpha - h_o)\, e^{y_1/h_o}$

$$y_2 - x_2 \tan\alpha - h_o = (y_1 - x_1 \tan\alpha - h_o)\, e^{y_1/h_o}\, e^{-y_2/h_o}$$

Finally, $y_2 - y_1 = h_o \ln \dfrac{y_1 - x_1 \tan\alpha - h_o}{y_2 - x_2 \tan\alpha - h_o}$ (4.19)

Recall that h_o is the normal depth and is defined such that $Q = -Kh_o \tan\alpha$. Since y_1 and y_2 are known, h_o can be obtained from (4.19) by trial and error.

The above solutions can be simplified somewhat by substituting $h = y - x \tan\alpha$ into (4.19). Then,

$$h_2 - h_1 + \tan\alpha\,(x_2 - x_1) = h_o \ln\left(\frac{h_1 - h_o}{h_2 - h_o}\right) \tag{4.20}$$

Harr (1962) described methods originally presented by Pavlovsky to obtain graphical solutions for equation (4.20). The methods given in the following example represent a straightforward use of graphical procedures to solve equation (4.20).

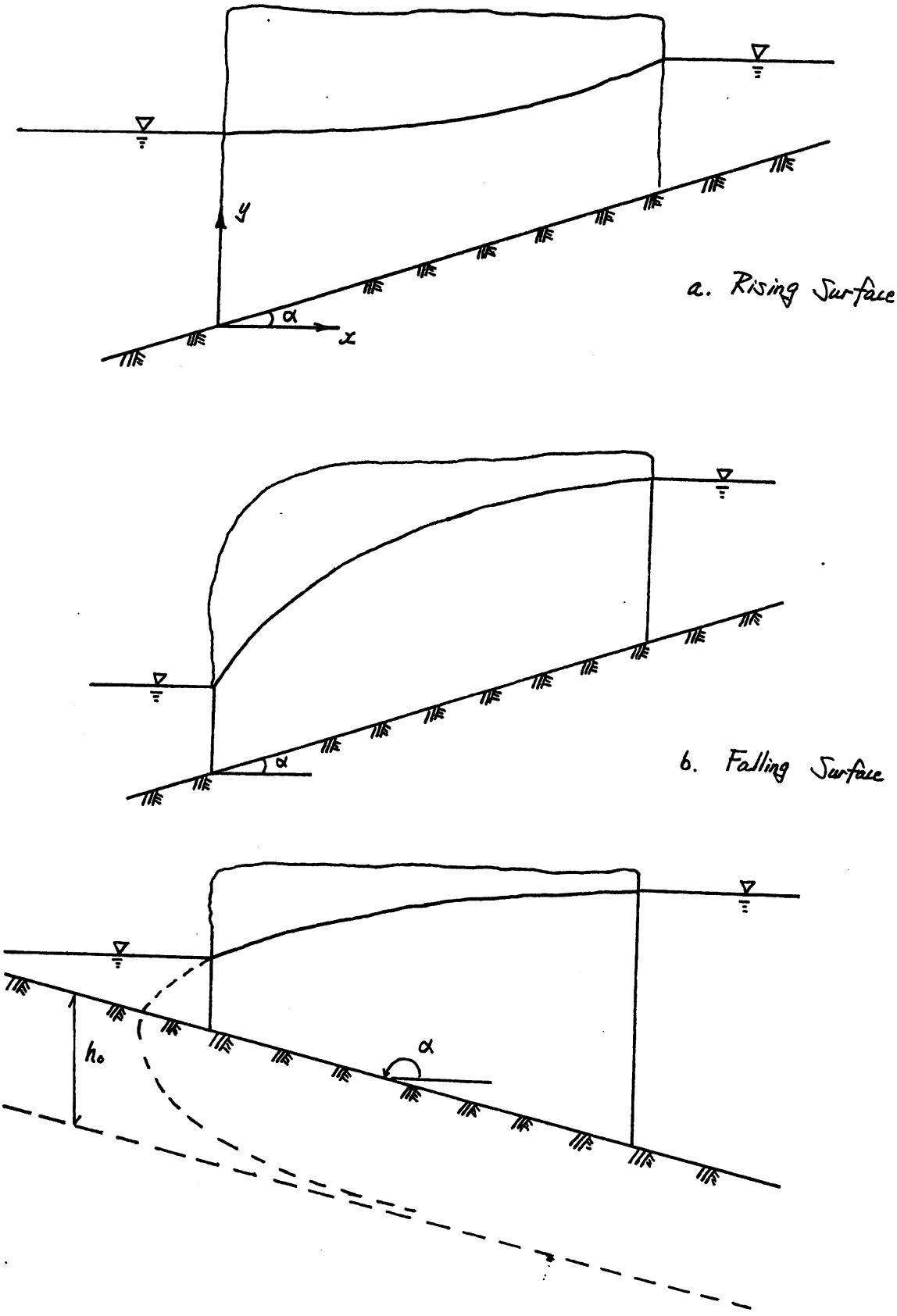
y
α
x
a. Rising Surface
α
b. Falling Surface
h_o
α
c. Falling Surface
- reverse slope

Figure 4-4.

4.4 Flow Over an Inclined Impervious Layer - An Example

A drain field for a septic tank system is to be installed on a sloping soil which has a uniform depth to an impermeable layer of 1.0 m (Figure 4-5). The soil drains to a road bed cut with h_1 = 0.4 m which is also the seasonal high water table (h_2 =

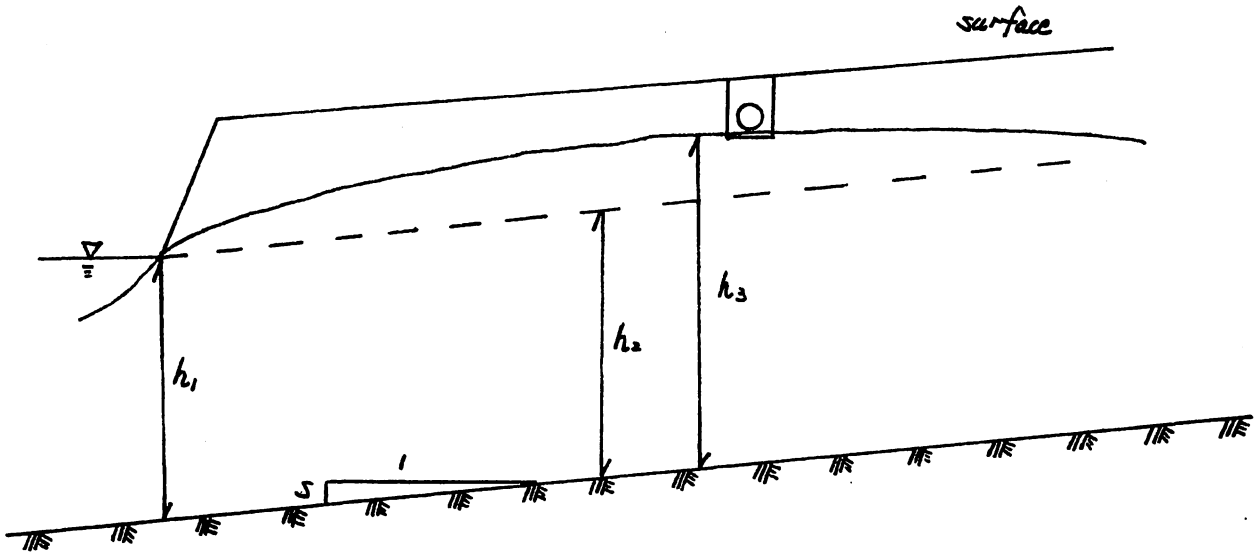

Figure 4-5. Effect of septic drain field on water table for a sloping soil. Broken curve represents seasonal high water table before septic drain field - solid curve after installation.

0.4 m) as indicated by mottling of the soil profile. The length of the drain is to be selected so that the water table does not rise closer than 0.3 m from the surface (h_3 = 0.7 m). If K = 1 m/d, S = 5% and L = 30 m.

Find:

a) Flowrate before a seepage field is installed (at seasonal high water table).

b) Flowrate per unit length of seepage field when h_3 = 0.7 m.

c) Effect of L on flowrate from seepage field.

Solution:

Note that tan α = S and for small slopes, $x_2 - x_1 = L$, so that equation (4.20) may be written

$$h_2 - h_1 + SL = h_o \ln \frac{h_1 - h_o}{h_2 - h_o}$$

a) Before the seepage field is installed $h_1 = h_2 = 0.4$ m = h_o so Q = -K h_o S = -lm/d (0.4m)(.05) = .02 m^3/m day.

b) For $h_3 = 0.7$ m we need to solve (4.21) with h_3 rather than h_2 to obtain h_o. Defining $f(h_o) = h_o \ln ((h_1-h_o)/h_2 - h_o))$ we can plot $f(h_o)$ versus h_o as shown in Figure 4-6. Then for $f(h_o) = h_3 - h_1 + SL = 0.7 - 0.4 + 0.05 \times 30 = 1.8$ we get $h_o = 0.73$. Therefore $q_t = q + q_s = -K h_o S$. But $q = -K h_2 S$, so $q_s = -K S (h_o - h_2) = 0.017$ m^3/md.

In this case a three bedroom house which produces 1.14 m^3/d (300 gpd) would require a single trench 67 m long (1.14/0.017 = 67). This length would not be practical for most situations so alternatives to increase the seepage rate from the septic field should be investigated. One alternative would be to install an interceptor drain upslope of the area so that the only continuous flow through the profile is q_s from the seepage field. Then the maximum flowrate is $q_t = q_s = -KS h_o = 0.036$ m^3/md for the above case and a 31 m trench would be required. Another means of increasing the lateral drainage rate is to install a drain downstream of the seepage field which would effectively decrease the length of the flow path, L. When this is

done, flow rates can be calculated using the same procedures as given in examples 1 and 2 (as long as L/h_2 is large) for both flat and sloping soils. A drainage outlet would be required to use this means of increasing flow rates and certain minimum distances from the seepage field should be maintained to insure adequate treatment of the waste water. However these alternative may be attractive for some sites where on-site waste disposal would not otherwise be feasible.

Solutions for the reduced flow rate from a drain field, q_s/KS, are plotted for profile depths of 1 and 3 m in Figures 4-7 and 4-8, respectively. In both cases, the maximum water table depth ($b-h_3$) was assumed to 0.3 m from the surface and H_1 values corresponding to outlet depths ($b-h_1$) of 0.8, 0.6 and 0.4 m were considered. For convenience in plotting, the natural seasonal high water table elevation was assumed equal to h_1 (i.e., $h_2 = h_1$) so that $q_s/KS = h_o - h_1$ in Figures 4-7 and 4-8. The plots can be used for the case considered to determine permissible design flow rates for any combination of K, S and L. As expected, maximum flow rates will increase with profile depth and decrease with natural water table elevation (Figures 4-7 and 4-8).

Note that for large values of SL the reduced flow rate tends towards a constant value which is equal to $h_3 - h_2$. This comes about because $q_s/KS = h_o - h_2$, and h_o approaches h_3 for large values of SL. The practical significance of this result is that, for large SL values, the solution is relatively insensitive to L and hence the exact location and description of the outlet is not critical. This is shown in Figure 4-9 where the design flow rate for the example considered above is plotted versus L

for three slopes. In the case of 5% slope the flow rate doesn't decrease with L for L values greater than 50 m. However this critical length is large for smaller slopes as shown for S = 1% where q_s continues to decrease with increasing L up to 120 m.

4.5. Steady Flow to Drains

Many of the methods used to predict effects of drain depth and spacing on water table position and drainage rates are based on steady state conditions. Most of the approaches use the Dupuit-Forchheimer assumptions. Consider the case of parallel drainage ditches that penetrate to an impermeable layer (Figure 4.10). The ditches are distance L apart and the water elevation in the ditches is d.

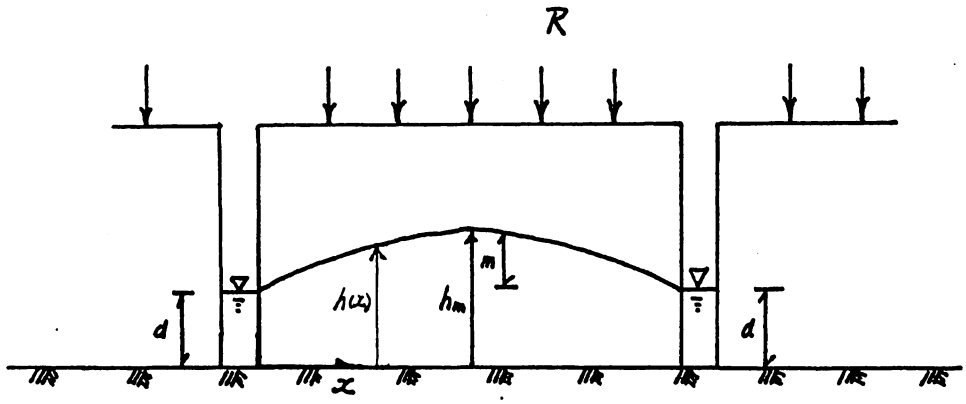

Figure 4.10. Steady drainage to parallel ditches.

Starting with equation (4.5) we have

$$\frac{dQ}{dx} = R \tag{4.5}$$

where

$$Q = -K\,h\,\frac{dh}{dx}$$

This is a special case of the problem shown in Figure 4.2 with $h_1 = h_2 = d$. Thus,

$$\frac{d^2h^2}{dx^2} = -\frac{2R}{K} \tag{4.7}$$

Integrating with respect to x given

$$\frac{dh^2}{dx} = -\frac{2R}{K}x + C \qquad (4-21)$$

From symmetry Q(x) = 0 at x = L/2

$$Q(x) = -K\,h\,\frac{dh}{dx} = 0 \qquad at\ x = L/2$$

From Equation (4.21), $2h\,\frac{dh}{dx} = -\frac{2R}{K}x + C_1$

at $x = L/2$

$$2\,h\,\frac{dh}{dx} = 0 = -\frac{2R}{K}\,\frac{L}{2} + C_1$$

$$C_1 = \frac{RL}{K}$$

$$\frac{dh^2}{dx} = -\frac{2R}{K}x + \frac{RL}{K}$$

Integrating again yields

$$h^2 = -\frac{R}{K}x^2 + \frac{RL}{K}x + C_2$$

The constant of integration $C_2 = d^2$ is determined by applying the boundary condition h = d at x = 0. Then the water table position as a function of x may be written as,

$$h^2 = -\frac{R}{K}x^2 + \frac{RL}{K}x + d^2 \tag{4.22}$$

The maximum water table elevation, $h = h_m$, occurs at x = L/2.

$$h_m^2 = -\frac{R}{K}\frac{L^2}{4} + \frac{RL^2}{2K} + d^2$$

$$h_m^2 = \frac{RL^2}{4K} + d^2$$

$$\frac{RL^2}{4K} = h_m^2 - d^2$$

$$\frac{RL^2}{4K} = (h_m - d)(h_m + d)$$

Note that $h_m - d = m$ so that $h_m = d + m$ and $h_m + d = 2d + m$. Substituting yield the following relationship,

$$R = \frac{4Km(2d + m)}{L^2} \tag{4.23}$$

or

$$L^2 = \frac{4Km(2d + m)}{R} \tag{4.24}$$

This expression relates the ditch spacing, L, to the water table elevation midway between the drains and the steady rainfall rate, R. The difference in hydraulic head driving lateral flow to the drains is $m = h_m - d$, and the flow rate is directly dependent on the hydraulic conductivity, K. Equations (4.23) and (4.24) are attributed to Donnan (1946), but may be considered special cases of more general equations derived by Hooghoudt (1940). Equation (4.23) is often used to express the drainage rate per unit area, q, as a function of water table elevations and the drainage system design parameters. It is applied for both steady state and quasi-steady state (slowly changing) conditions. The assumption implicitly in its use for conditions in which rainfall is not steady (and in fact may be zero for a period of time), is that the drainage flux, q, for a given water table elevation m is equal to the steady rainfall rate that would cause the midpoint water table to be a distance m above the ditch water level.

$$q = R = \frac{4Km(2d + m)}{L^2}$$

This equation may also be expressed as,

$$q = \frac{4Km^2 + 8Kmd}{L^2} \tag{4.25}$$

or,

$$L = \sqrt{\frac{4Km^2 + 8Kmd}{R}} \tag{4.26}$$

Note that if $d = 0$, $q = 4Km^2/L^2$, so the first term in equation (4.25) represents the flow above the horizontal plane defined by the elevation of the water in the ditch.

Likewise, if $d >>> m$, most of the flow occurs below the plane of the ditch water level and

$$q \approx 8Kmd/L^2$$

Then equation (4.25) may be written as,

$$q = \frac{4Km^2}{L^2} + \frac{8Kmd}{L^2}$$

where the first term on the right side represents the flow contributions above the ditch water level and the second term represents the flow below the plane of the ditch water elevation.

To this point we have assumed that the profile is homogeneous and isotropic. If the profile is layered with $K = K_1$ above the ditch water level and $K = K_2$ below the ditch water level, we may written equation (4.27) as

$$q = \frac{4K_1m^2 + 8K_2md}{L^2}$$

Next, consider ditches that do not penetrate to the impermeable layer, and drain tubes buried a distance d above the impermeable layer (Figures 4.11 and 4.12)

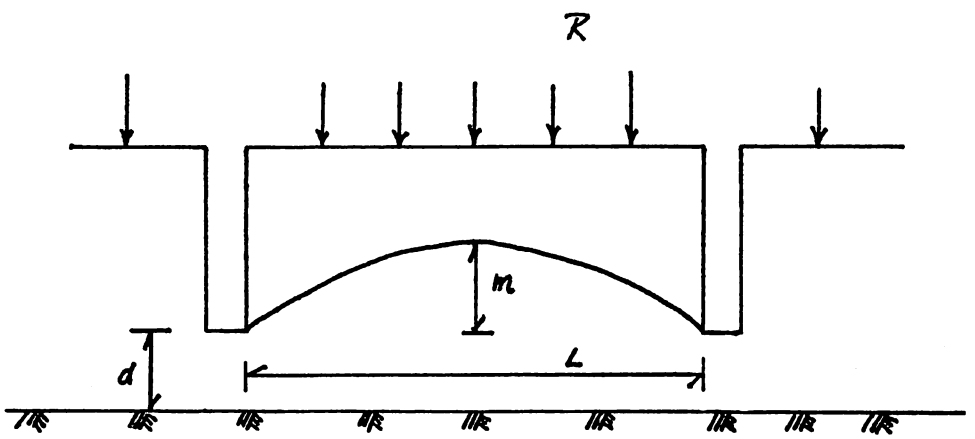

Figure 4.11. Drainage ditches that do not penetrate to the impermeable layer.

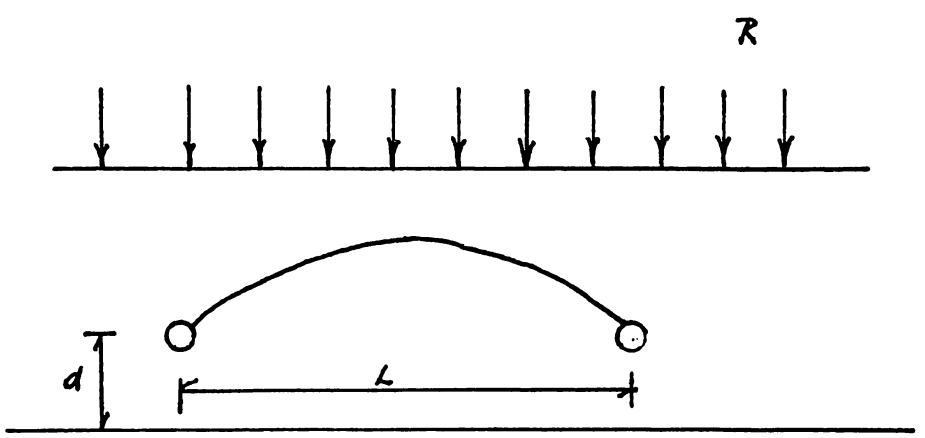

Figure 4.12. Parallel drain tubes buried above the impermeable layer.

It should be obvious by inspection that the steady recharge rate, R, required to maintain the midpoint water table at distance, m, above the drain or ditch water level would be less in Figure 4.12 than in Figure 4.11 and less in Figure 4.11 than in Figure 4.10. In other words the steady drainage rate for a given m value would generally be less for drain tubes (Figure 4.12) than for open ditches at the same depth (Figure 4.11) than for open ditches that penetrate to the impermeable layer (Figure 4.10). The reason for the reduced flow rate is that the streamlines are not horizontal as they approach the drain in Figure 4.11 and 4.12. The streamlines converge close to the drain resulting in increased head losses in that region.

In order to account for head losses due to convergence Hooghoudt suggested that the flow calculated for the lower zone ($8K_2md/L^2$) be reduced by replacing depth to the impermeable layer, d, with an equivalent depth, d_e. Then equation (4.27) may be written as,

$$q = \frac{4K_1m^2 + 8K_2d_em}{L^2} \tag{4.28}$$

This assumes that flow in the upper zone is not affected by convergence, an assumption that would be valid as long as the water table does not stand over the drain. This assumption is not always valid, however, and the methods must be modified where there are high head losses near the drain.

Hooghoudt determine d_e by assuming horizontal flow in the region away from the drains and radial flow close to the drains. Numerous plots of d_e versus d for

ranges of drain spacings have been published (e.g. van Schilfgaarde, 1974). A disadvantage of this approach is that a new set of curves is required for each drain radius. The equation from which the charts were derived was obtained by Hooghoudt for flow below the drains as,

$$q = \frac{K_2 m}{L F_H} \tag{4.29}$$

where

$$F_H = \frac{(L - d\sqrt{2})^2}{8dL} + \frac{1}{\pi} \ln \frac{d}{r\sqrt{2}} + f(d,L) \tag{8.30}$$

where f(d,L) is generally small and may be neglected.

Then d_e is defined by

$$q = \frac{K_2 m}{L F_H} = \frac{8 K_2 de\ m}{L^2}$$

or

$$\frac{8d_e}{L} = \frac{1}{F_H} = \frac{1}{\dfrac{(L - d\sqrt{2})^2}{8D_2L} + \dfrac{1}{\pi}\ln\dfrac{d}{r\sqrt{2}} + f(d,L)}$$

$$d_e = \frac{L}{\dfrac{(L^2 - 2\sqrt{2}\,dL + 2d^2)}{dL} + \dfrac{8}{\pi}\ln\dfrac{d}{r\sqrt{2}} + 8f(d,L)}$$

(4.30)

$$d_e = \frac{d}{\dfrac{L^2 - \sqrt{2}\,dL + 2d^2}{L^2} + \dfrac{d}{L}\left[\dfrac{8}{\pi}\ln\dfrac{d}{r\sqrt{2}} + 8f(d,L)\right]}$$

(4.31)

$$d_e = \frac{d}{1 + \dfrac{d}{L}\left[\dfrac{8}{\pi}\ln\dfrac{d}{r\sqrt{2}} - 2\sqrt{2} + 2\dfrac{d}{L} + 8f(d,L)\right]}$$

(4.32)

$$d_e = \frac{d}{1 + \dfrac{d}{L}\left[\dfrac{8}{\pi}\ln\dfrac{d}{r} - 3.7 + 2\dfrac{d}{L} + 8f(d,L)\right]}$$

(4.33)

Moody (1967) analyzed Hooghoudt's methods and suggested that the equivalent depth could be expressed as,

$$d_e = \frac{d}{1 + \frac{d}{L}\left[\frac{8}{\pi}\ln\frac{d}{r} - \alpha\right]} \quad for \quad \frac{L}{d} > 3$$

(4.34)

where

$$\alpha = 3.55 - 1.6\frac{d}{L} + 2\left(\frac{d}{L}\right)^2$$

(4.35)

Moody noted that α may be approximated as 3.4 for most purposes.

For $\frac{L}{d} < 3$, Moody suggested that

$$d_e = \frac{L\pi}{8\left(\ln\frac{L}{r} - 1.15\right)}$$

(4.36)

Note that equation (4.33) is close to equation (4.34). If d/L = 0.15 and f(d,L) is neglected, equation (4.33) reduces to equation (4.34) with $\alpha = 3.4$

Example 1.

Drains are to be placed 1.0 m deep in a soil with depth to the impermeable layer of 3.0m. The drains are to be spaced such that the water table will not be closer to the surface than 30cm when the steady infiltration or recharge rate is 1.0 cm/day. The

drain radius is 5 cm and the hydraulic conductivity is 4 cm/hr. What is the drain spacing?

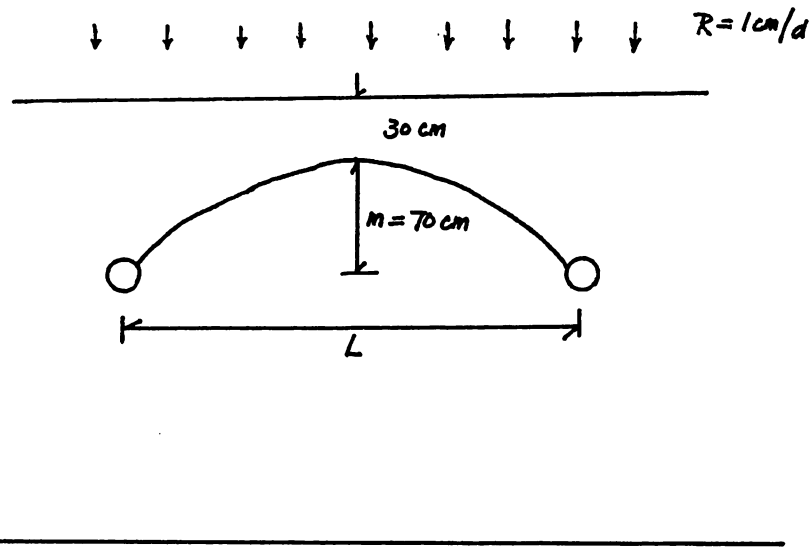

Solution:

From the Hooghoudt equation

$$q = \frac{4Km^2 + 8K\ mde}{L^2}$$

q = DDR, the design drainage rate = 1 cm/d

$$L = \frac{\sqrt{4Km^2 + 8K\ mde}}{DDR}$$

m = 0.7 m, K = 0.96 m/d, DDR = 0.01 m/d

1. First assume $d_e = d = 2.0$ m

$$L = \sqrt{\frac{4(0.96)(0.7)^2 + 8(0.96)(0.7)2.0}{.01}}$$

L = 35.5 m

2. Calculate $d_e = \dfrac{d}{1 + \dfrac{d}{L}\left[\dfrac{8}{\pi}\ln\dfrac{d}{r} - 3.4\right]}$

$$d_e = \frac{2.0}{1 + \dfrac{2}{35.5}\left[\dfrac{8}{\pi}\ln\dfrac{2.0}{.05} - 3.4\right]} = 1.49m$$

3. Recalculate L based on new d_e

   L = 31.4 m

4. Recalculate d_e and continue steps 3 and 4 until L converges to a constant value

   d_e = 1.44, recalculate L;

   L = 31.0, recalculate d_e;

   d_e = 1.44, the same as assumed so

   <u>L = 31.0 m</u>

Example 2. Solve example 1 if the effective radius of the drain tube is 1.5 cm.

Solution:

1. Start with an assumed drain spacing of 31 m and use r = r_e = 1.5 cm in Moody's equation to calculate d_e

$$d_e = \frac{d}{1 + \frac{d}{L}\left(\frac{8}{\pi}\ln\frac{d}{r_e} - 3.4\right)}$$

$$d_e = \frac{2.0}{1 + \frac{2}{31}\left(\frac{8}{\pi}\ln\frac{2}{0.015} - 3.4\right)}$$

$$d_e = 1.26 \text{ m}$$

2. Solve for L using the Hooghoudt equation.

$$L = \sqrt{\frac{4(0.96)(0.7)^2}{.01} + \frac{8(0.96)(0.7)de}{.01}}$$

$$L = 29.4 \text{ m}$$

3. Recalculate d_e and continue until convergence is obtained.

$d_e = 1.24$ m

$L = 29.2$ m

$d_e = 1.23$ m

<u>L = 29.2 m</u>

so the drain spacing would be 29 m for real drains versus 31 m for an ideal 10 cm drain.

Example 3. Solve example 1 with a real drain for the case where K = 4 cm/hr for the soil above the drain (< 1 m deep) and K = 1 cm/hr for depths > 1 m.

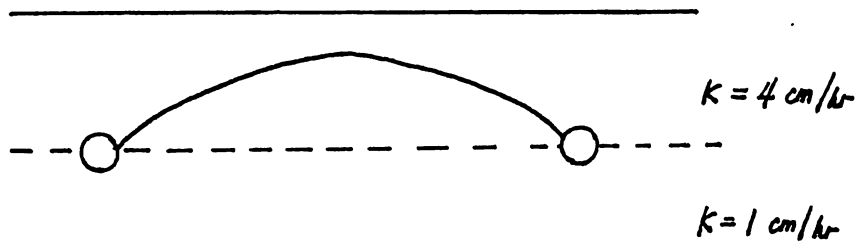

1. Assume d_e = 1.3 m and solve for L from the Hooghoudt equation with K_1 = 0.96 m/d and K_2 = 0.24 m/d.

$$L = \sqrt{\frac{4(0.96)(0.7)^2}{0.01} + \frac{8(0.24)(0.7)(1.3)}{0.01}}$$

$$L = 19 \text{ m}$$

2. Recalculate d_e and L until get convergence.

$$d_e = \frac{2.0}{1 + \frac{2.0}{19}\left[\frac{8}{\pi}\ln\frac{2.0}{.015} - 3.4\right]}$$

d_e = 1.02

L = 18 m; recalculate d_e;

d_e = 1.0 m; recalculate L;

<u>L = 18 m</u>

Example 4. The profile is layered as shown below.

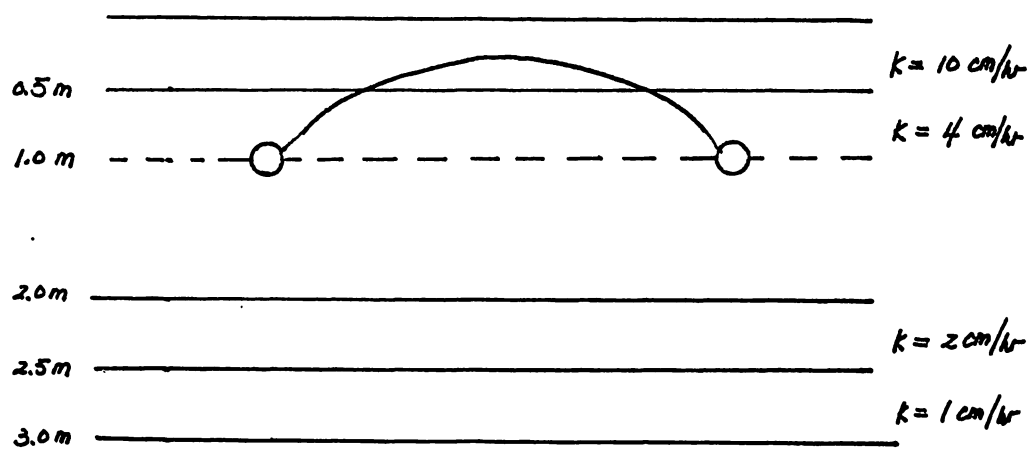

Solution: Determine equivalent K values and use the Hooghoudt equation.

$$q = \frac{4K_1m^2}{L^2} + \frac{8K_2mde}{L^2}$$

where K_1 and K_2 are the effective K above and below the drain, respectively.

In this case we have a problem for the soil layers beneath the drain. If the drain spacing is 20 to 30 m, d_e would be about 1.0 to 1.25 m (examples 2 and 3). However K= 4cm/hr for the soil in the vinicity of the drain (from 0.5m above to 1.0m below the drain). we use K_2 = 4 cm/hr, the layers with lower K values (between depths of 2.0 m and 3.0 m) would not be represented.

We solve this by determining an effective <u>depth</u> of the profile below the drain that has the same transmissivity as the actual profile but the K value of the soil around the drain.

$K_dD = K_2D_2 + K_3D_3 + K_4D_4$

$0.04\ D = 0.04(1.0) + 0.02(0.5) + 0.01(0.5)$

$D = 1.375$ m

That is the transmissivity of the region below the drain is the same as a uniform soil 1.375 m thick with a K of 0.04 m/hr. = .96 m/d

The equivalent K of the region above the drain is

$0.7K_e = 0.5 \times 0.04 + 0.2 \times 0.1$

$K_e = 0.057$ m/hr $= 1.37$ m/d

Then treat the profile as a two-layered system with $K_1 = 0.057$ m/hr in top layer 1.0 m thick and $K_2 = 0.04$ m/hr in the bottom layer which has an <u>equivalent</u> thickness of 1.375 m.

Then solve as before:

1. Assume L = 25 m

$$d_e = \frac{1.375}{1 + \frac{1.375}{25}\left[\frac{8}{\pi}\ln\frac{1.375}{.015} - 3.4\right]}$$

$$d_e = 0.95 \text{ m}$$

$$L = \sqrt{\frac{4(1.37)(.7)^2}{.01} + \frac{8(.96)(.7)(0.95)}{.01}}$$

L = 27.9 m; recalculate d_e

$d_e = 0.98$ m

L = 28.2 m

Example 5. What is the drainage rate from the layered profile shown below.

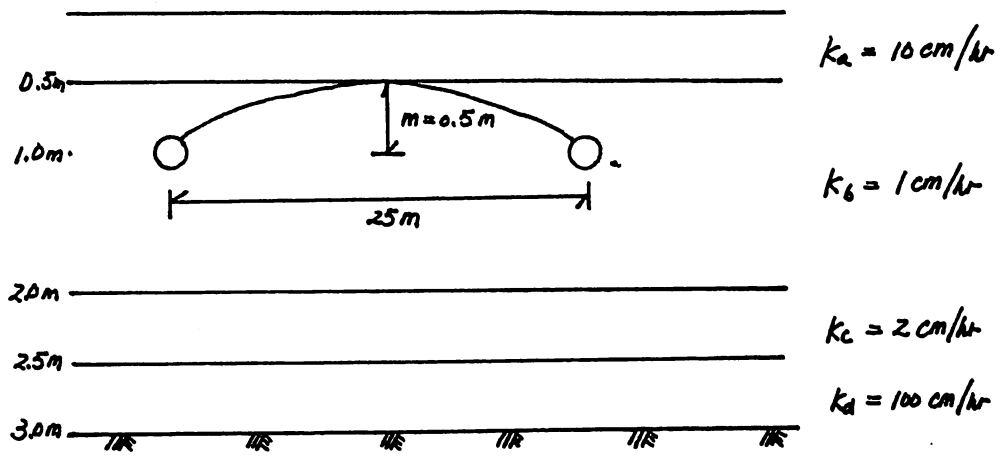

Solution:

1. $$q = \frac{4K_1m^2 + 8K_2dem}{L^2}$$

2. In this case K_1 = 1 cm/hr. The question is how to define K_2 and d_e. The best method is to first determine an effective depth, D, below the drain that would have the transmissivity of the profile if K = 1 cm/hr, the conductivity around the drain.

$$K_bD = K_b(100\text{ cm}) + K_c(50\text{ cm}) + K_d(50\text{ cm})$$

$$D = \frac{100K_b + 50K_c + 50K_d}{K_b}$$

$$D = \frac{100\ 1 + 50\ (2) + 50\ (100)}{1} = 5200cm$$

3. Now determine d_e for d = 5200 cm and L = 2500 cm from the Moody equation for $\frac{L}{d} < 3$

$$d_e = \frac{L\pi}{8(\ln \frac{L}{r} - 1.15)} = \frac{25\pi}{8\left(\ln\frac{25}{.05} - 1.15\right)}$$

d_e = 1.94 m

so

d_e

This ~~d~~ is d sub e = d_e

$$q = \frac{4K_1m^2 + 8K_2 d_e m}{L^2}$$

$$= \frac{4 \times 1\ cm/hr(50cm)^2 + 8 \times 1\ cm/hr\ (194)(50)\ cm^2}{2500cm^2}$$

q = 0.0156 cm/hr = 0.375 cm/day

4. A common error would be to define

$$K_e = \frac{100(1) + 50(2) + 50(100)}{200} = 25cm/hr$$

and

$$d_e = \frac{200}{1 + \frac{200}{2500}\left(\frac{8}{\pi}\ln\frac{200}{5} - 3.4\right)} = 135cm$$

Then

K de m

$$q = \frac{4(1)(50)^2 + 8(26)(135)(50)}{(2500)^2} = 0.226\frac{cm}{hr}$$

= 5.43 cm/day. A factor of 14.5 difference.

4.6. Steady Flow During Subirrigation

The flow domain during steady subirrigation is shown in Figure 4.13.

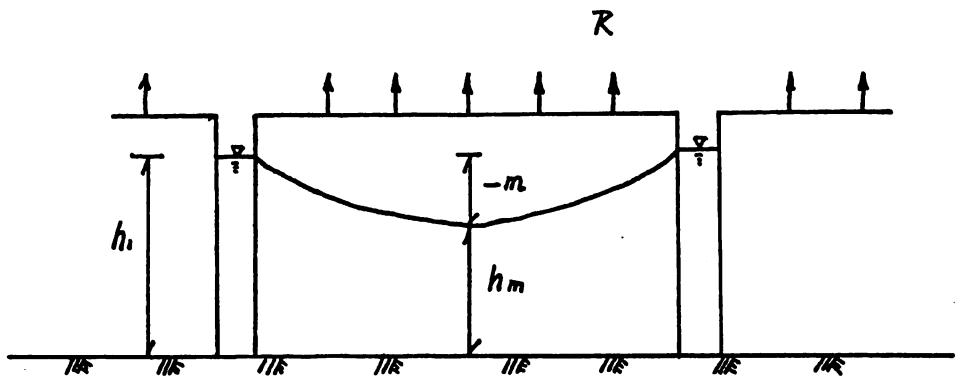

Figure 4.13

The solution is the same as equation (4.22) with h_1 substituted for d.

$$h^2 = -\frac{R}{K}x^2 + \frac{RL}{K}x + h_1^2$$

Note that R is the steady evapotranspiration rate in this case and it is negative.

At x = L/2, h = h_m

$$h_m^2 = -\frac{R}{K}\frac{L^2}{4} + \frac{RL^2}{2K} + h_1^2$$

$$h_m^2 - h_1^2 = \frac{R}{K}\frac{L^2}{4}$$

$$(h_m - h_1)(h_m + h_1) = \frac{R}{K}\frac{L^2}{4}$$

Keeping the same notation as for drainage $m = h_m - h_1$ is negative for subirrigation. Then $h_1 + m = h_m$, so $h_m + h_1 = 2h_1 + m$.

$$m(2h_1 + m) = \frac{R}{K}\frac{L^2}{2}$$

and

$$q = R = \frac{4Km(2h_1 + m)}{L^2}$$

This is the same form as the Hooghoudt or Donnan equation (equation (4.23)) with h_1 substituted for d. Remember that both m and R are negative for subirrigation.

When the drains don't penetrate to the impermeable layer or when drain tubes are used (Figure 4.14) $h_1 = d + y_1$ and we would substitute d_e for d to account for convergence near the drains.

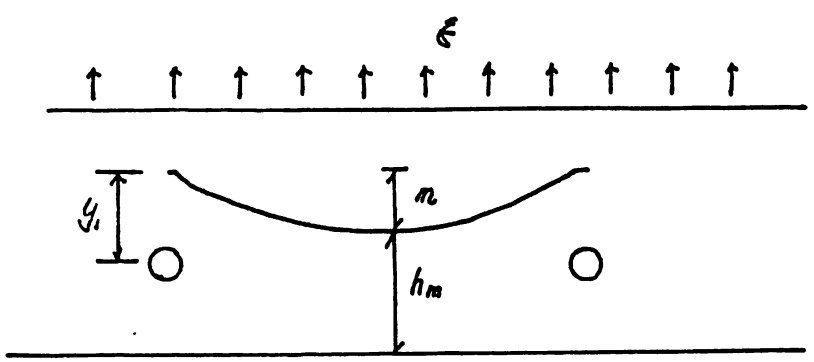

Figure 4.14. Steady subirrigation with drain tubes

Then $q = \dfrac{4Km(2h_1 + m)}{L^2}$ where $h_1 = y_1 + d_e$

At what value of h_m would q be maximum? That is what value of h_m would sustain the highest ET rate?

This can be determined by differentiating the above equation with respect to m;

$$\frac{dq}{dm} = \frac{8Km + 8Kh_1}{L^2} = 0$$

The maximum absolute value of q will occur when $m = -h_1 = -(y_1 + d_e)$. This means that m is the negative value of the distance from the water level over the drains (normally assumed to be the pressure head in the drain in the case of tube drains) to depth d_e below the drain. Ernst (1975) observed that the maximum lateral hydraulic gradient, and hence the maximum lateral flowrates, would occur when the water table at the midpoint was at the actual depth of the impermeable layer, rather than at the effective depth of the impermeable layer. Thus the above equation underestimates the magnitude of q for deep midpoint water tables. Ernst (1975) proposed the following equation to correct this problem.

$$q = \frac{4Km^2\dfrac{h_1}{H_1} + 8Kh_1m}{L^2}$$

where $H_1 = y_1 + d$ and $h_1 = y_1 + d_e$.

Example:

Drains with an effective radius of 2.0 cm are to be buried 50 m apart at a depth of 1 m. What will be the steady subirrigation rate when the water level over the drains is 0.4 m below the surface and midway between the drains the water table is 0.9 below the surface? The hydraulic conductivity is 10 cm/hr and depth to the impermeable layer is 4.0 m below the surface.

Solution: m = -50 cm, L = 50 m, K = 10 cm/hr

Find d_e; $$d_e = \frac{d}{1 + \frac{d}{L}\left[\frac{8}{\pi} \ln \frac{d}{r_e} - 3.4\right]}$$

d = 300 cm, r_e = 2 cm, y_1 = 100 - 40 = 60 cm

d_e = 192 cm

Then $h_1 = y_1 + d_e = 60 + 192 = 252$ cm

$H_1 = 60 + 300 = 360$ cm

m = - 50 cm

$$q = \frac{4 \cdot 10\ cm/hr \cdot \frac{252}{360} \cdot (-50\ cm)^2 + 8 \cdot 10\ cm/hr \cdot 252 \cdot (-50)}{(5000\ cm)^2}$$

q = -0.0375 cm/hr

<u>q = -0.9 cm/day</u>

If the correction factor h_1/H_1 had not been applied the result would have been,

$$q = -0.036 \text{ cm/hr} = -0.87 \text{ cm/day.}$$

In this example the difference is negligible, but this will not always be the case.

4.7 Nondimensional Form of Equation for Subirrigation

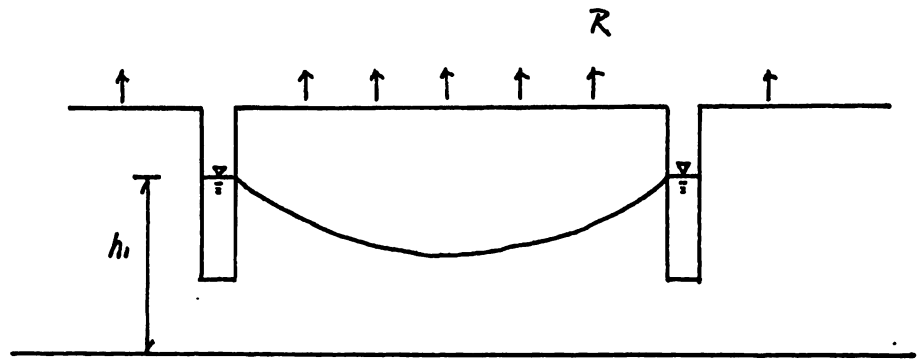

$$Q = -K\, h\, \frac{dh}{dx}$$

$$\frac{dQ}{dx} = R$$

R > 0 rainfall

R < 0 ET

$$\frac{d}{dx}\left(-k\, h\, \frac{dh}{dx}\right) = R$$

$$\frac{d}{dx}\left(h\, \frac{dh}{dx}\right) = -R/K$$

let $\xi = x/L$ $\qquad 0 \leq \xi \leq 1$

$H = h/h_1$ $\qquad 0 \leq H \leq 1$

Then $dx = L d\xi$

$$\frac{d}{dx} = \frac{l}{L}\frac{d}{d\xi}$$

$$\frac{1}{L}\frac{d}{d\xi}\left(h_1 H \frac{1d(h_1 H)}{L\, d\, \xi}\right) = -R/K$$

$$\frac{h_1^2}{L^2}\frac{d}{d\xi}\left(H\frac{dH}{d\xi}\right) = -R/K$$

$$\frac{d}{d\xi}\left(H\frac{dH}{d\xi}\right) = -\frac{R\,L^2}{K\,h_1^2} - \mu$$

Boundary conditions:

1. $H = 1,\ \xi = 0$

2. $\frac{dH}{d\xi} = 0,\ \xi = \frac{1}{2}$

or $H = 1,\ \xi = 1$

$$\frac{d}{d\xi}\left(\frac{1}{2}\frac{dH^2}{d\xi}\right) = -\mu$$

$$\frac{d^2H^2}{d\xi^2} = -2\mu$$

$$\frac{dH^2}{d\xi} = -2\mu\ \xi + C$$

$$2H \frac{dH}{d\xi} = -2\mu\ \xi + C$$

$$H \frac{dH}{d\xi} = 0 \quad at\ \xi = \frac{1}{2}$$

$$0 = -2\mu \frac{1}{2} + C$$

$$C = +\mu$$

$$\frac{dH^2}{d\xi} = -2\mu\ \xi + \mu$$

$$H^2 = -\mu\ \xi^2 + \mu\ \xi + C_2$$

$$H = 1,\ \xi = 0$$

$$\therefore C_2 = 1$$

$$H^2 = -\mu\ \xi^2 + \mu\ \xi + 1$$

Thus the nondimensional form of the solution is an elliptical equation as expected.

What is the value of μ when $H = 0$ at $\xi = \frac{1}{2}$? This will be the μ value associated with the maximum ET rate for a given h_1 value. Substituting $\xi = \frac{1}{2}$ and $H = 0$ in the above equation gives,

$$0 = -\frac{1}{4}\mu + \frac{1}{2}\mu + 1$$

$$\frac{1}{4}\mu = -1$$

$$\mu = -4 = +\frac{RL^2}{Kh_1^2}$$

so the largest absolute value of ET is

$$R = -\frac{4Kh_1^2}{L^2}$$

That is, the largest ET that can be sustained on a steady state basis is given by the above equation. Note that no correction has been made for convergence near the drains.

HOMEWORK PROBLEMS BAE 771

4.1. (Harr, 2). Two observation wells are located as shown in the figure below. The observed elevations of the free surface above the horizontal impervious boundary are h_1 = 40.3 ft and h_2 = 35.5 ft. The hydraulic conductivity is 4 ft/day. Determine (a) the elevation of the free surface at section M; (b) the quantity of seepage per 10 ft of section.

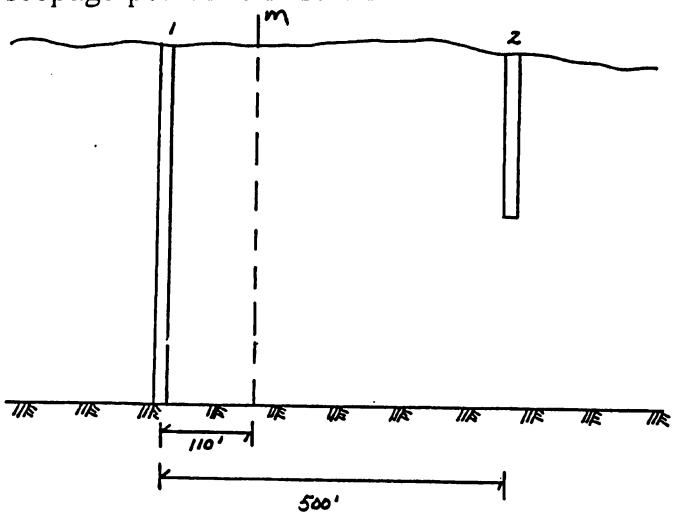

4.2. (Harr, 5). The section shown below reaches a steady state for flow under a uniform infiltration of e. Find the ratio e/K and construct the free surface for the section if the water level above the impervious base in rivers A and B is 20 ft and the elevation of the water surface in the observation well is 21 ft.

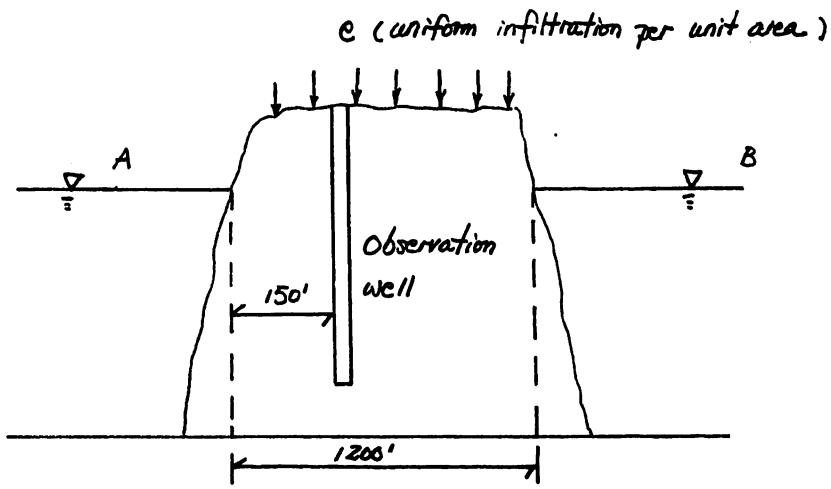

4.3. (Harr, 6). In the case of uniform infiltration onto a free surface between two rivers, demonstrate that the water divide is closer to the river with the higher water level.

4.4. (Harr, 7). Placing the origin of coordinates at a = L/2 as shown in the figure below and assuming h_{max} = b, demonstrate that the equation for the free surface is the ellipse $h^2/b^2 + x^2/a^2 = 1$.

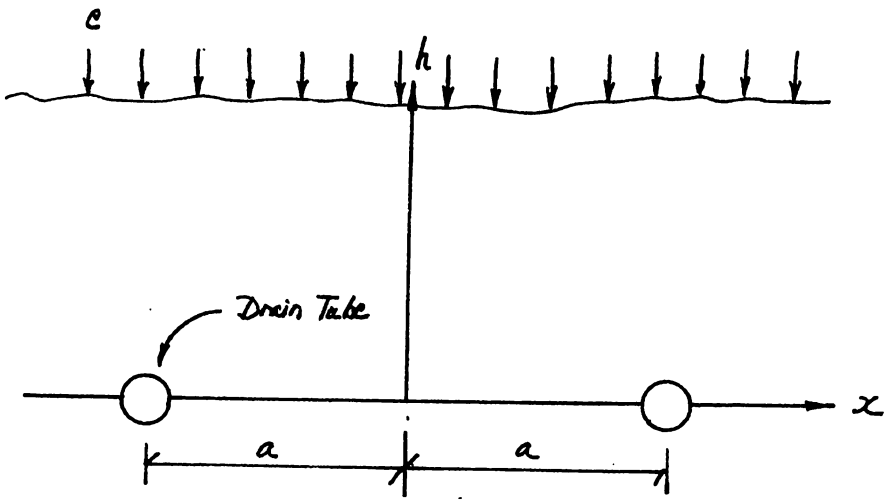

4.5. (Harr, 10). The section shown below consists of a sand with K of 14.0 ft/day. The water level at the river is at an elevation of 128.8 ft., 14 ft above an inclined layer of relatively impervious clay. The water level at the observation well is at 140.0 ft, 32 ft above the clay layer. Determine (a) the normal depth; (b) the discharge per 10 ft of section; and (c) construct the free surface between the river and the well.

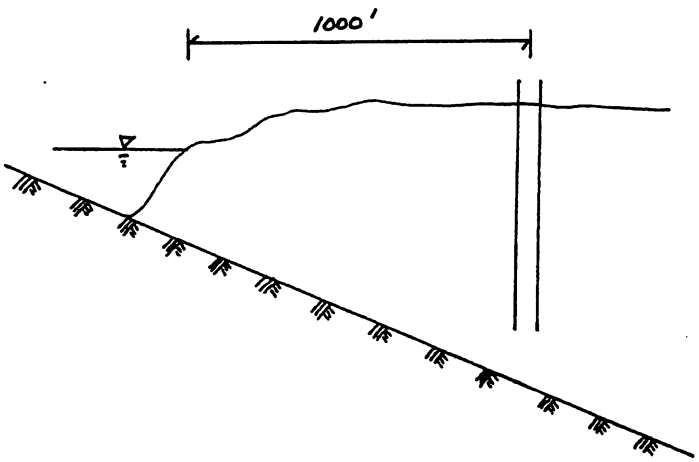

4.6. (Harr, 11). Repeat problem 4.5 with K = 4.4 ft/day.

4.7. Obtain the free surface for the well in the figure below by Dupuit's theory. How much water is pumped?

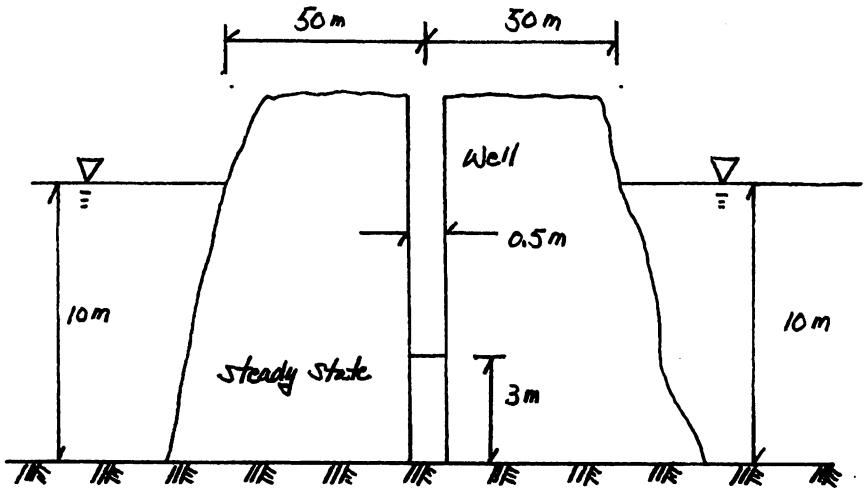

4.8.

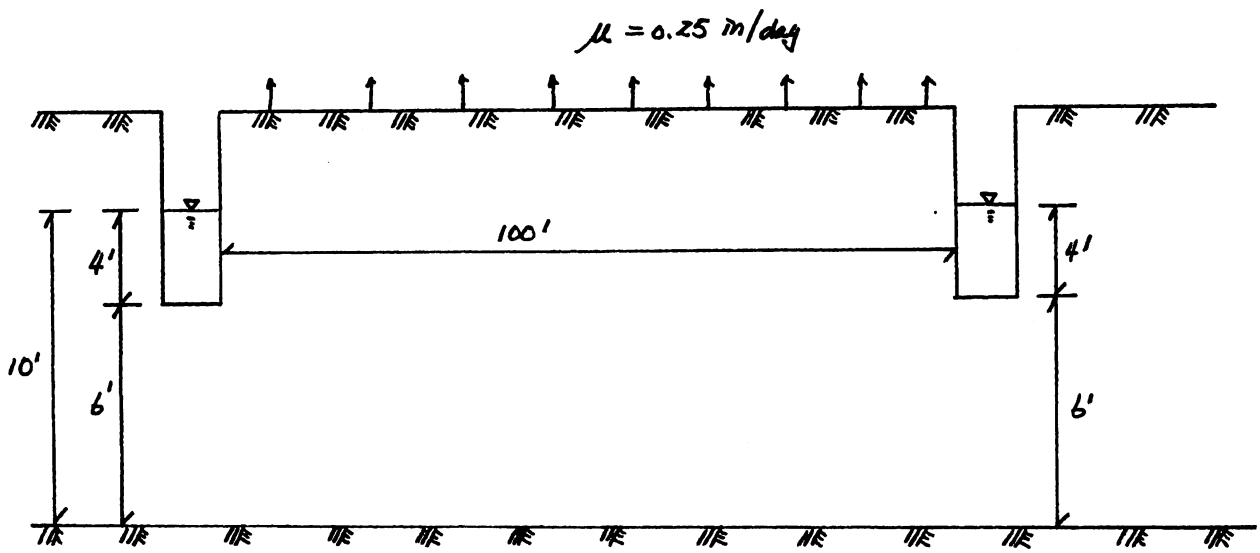

The above sketch represents a water table control system in a soil with K = 2 in/hr. Plot the water table profile. Generalize your solution so that you won't have to find a new solution for each K, L, h, etc.

4.9.

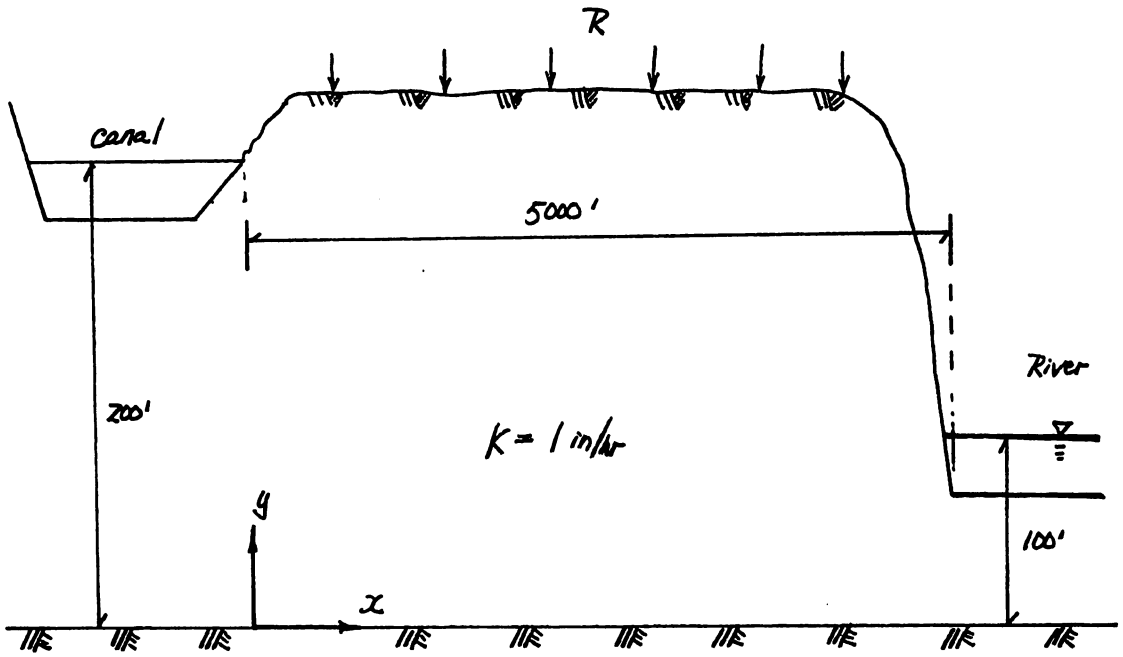

a) For a rainfall rate of 1 in/day find the steady state FLOWRATE INTO THE RIVER in $ft^3/hr\ ft$.

b) Find the steady state flowrate into (or out of) the canal in $ft^3/hr\ ft$.

c) Derive the equation for the free surface.

d) Find the distance of the free surface from the impermeable layer at x = 2500 ft.

e) What is the smaller value of R at which water seepage <u>FROM</u> the canal will be zero?

4.10. In the attached figure, $h_1 = 0.2$ m, $h_2 = 0.5$ m and $h_3 = 0.8$ m. If the distance from drain to the outlet is 20 m, what is the flowrate under natural conditions (when $h_2 = 0.5$ m)? What is the total flowrate when the seepage field is installed and the water table is raised $h_3 = 0.8$ m? What is the seepage rate from the drain under those conditions? $K_s = 2$ cm/hr, $s = 0.08$.

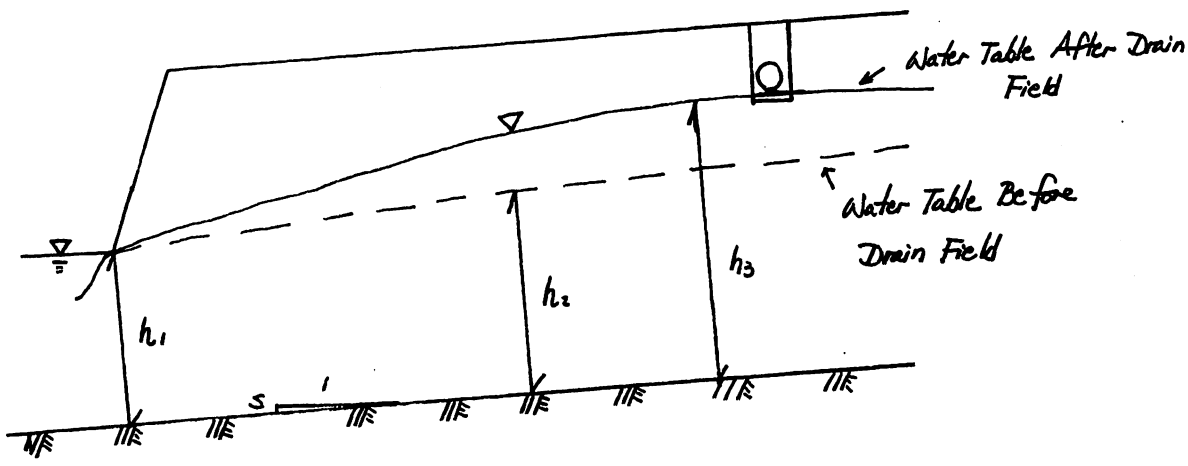

4.11. If $h_2 = h_1 = 0.4$ m and $h_3 = 0.7$ m in problem 4.10, develop a plot of q_s/KS versus SL where q_s is the flowrate from the drain field.

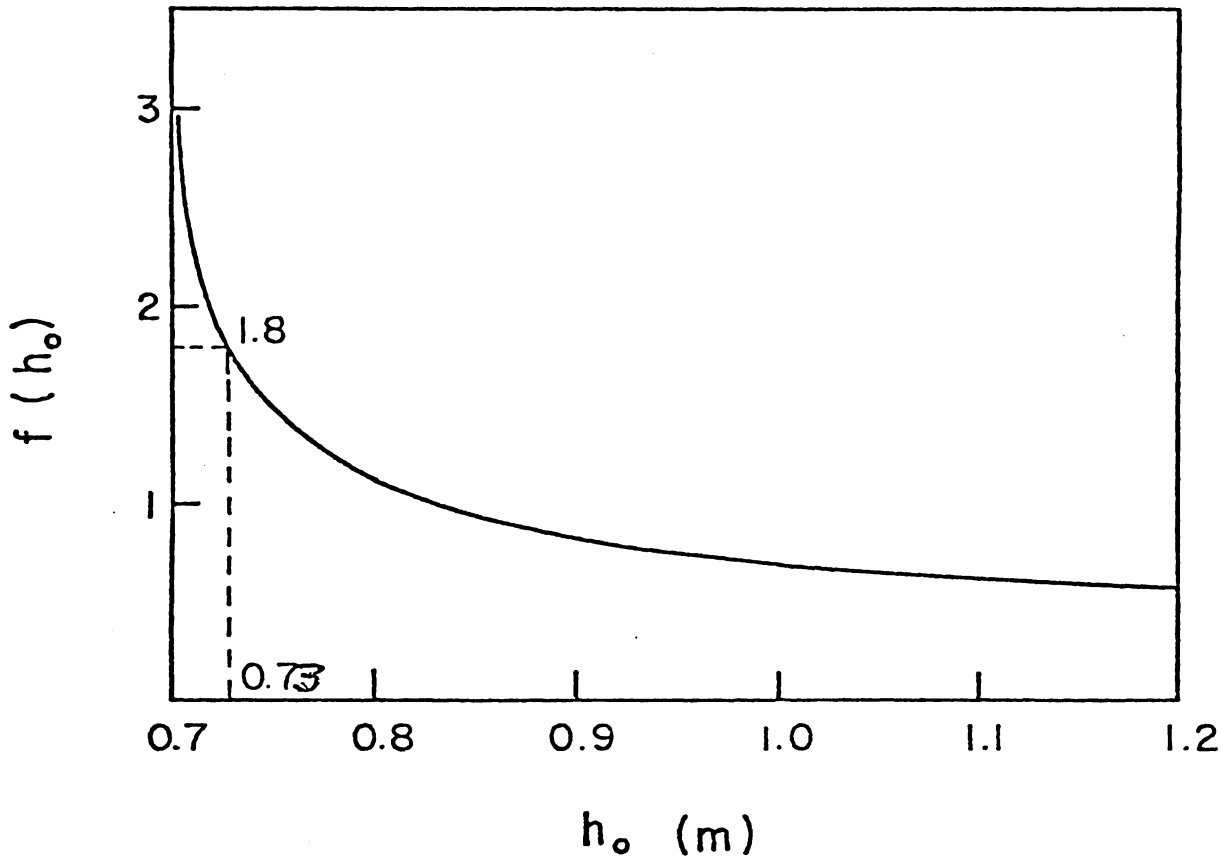

Figure 4-6. Graphical solution for $f(h) = h_o \ln((h_1-h_o)/(h_2-h_o))$ VERSUS h_o for $h_1 = 0.4$ and $h_2 = 0.7$ m.

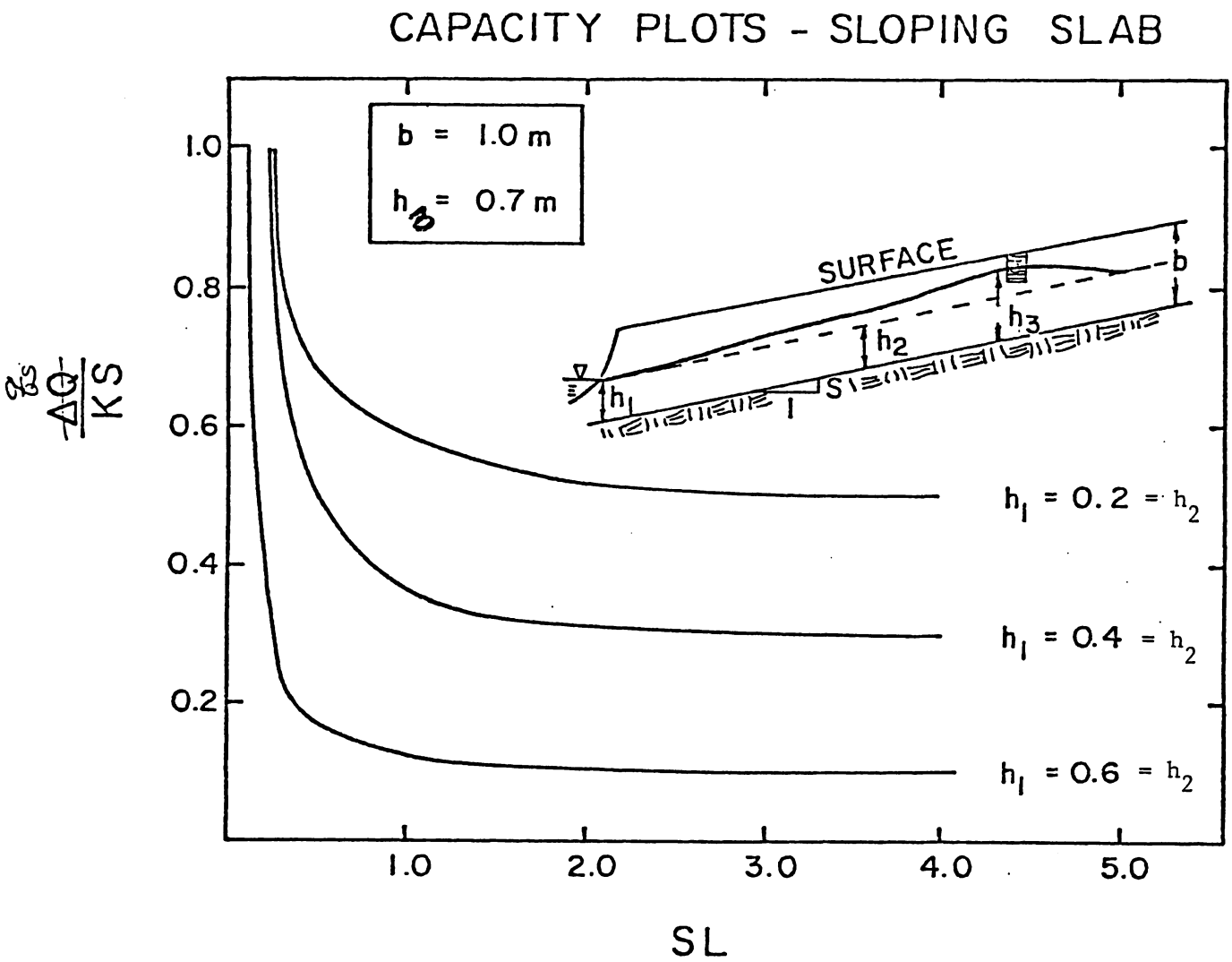

Figure 4-7. Capacity plots for seepage field on a sloping soil with a 1 m profile depth.

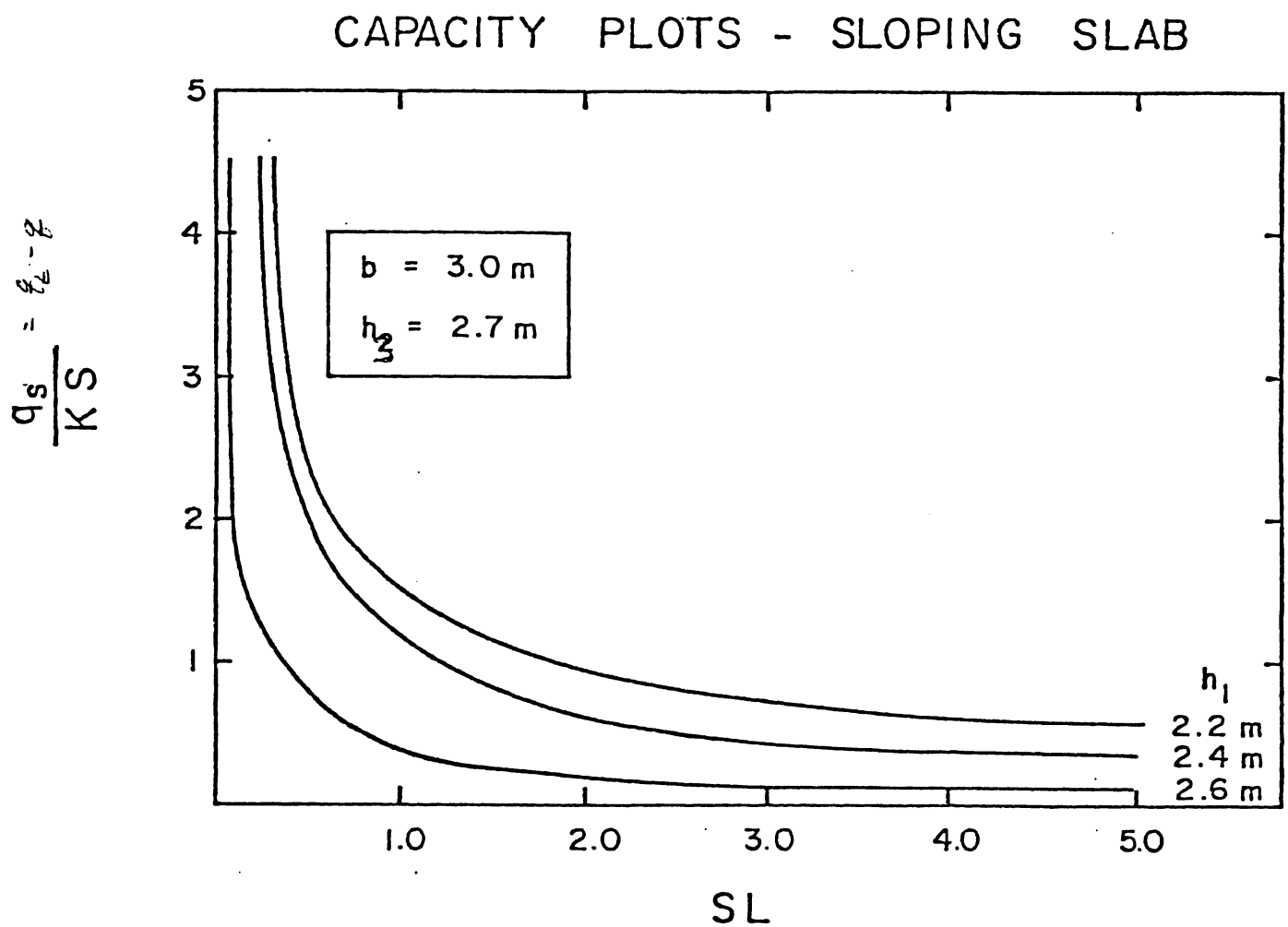

Figure 4-8. Capacity plots for a seepage field on a sloping soil with a 3 m profile depth.

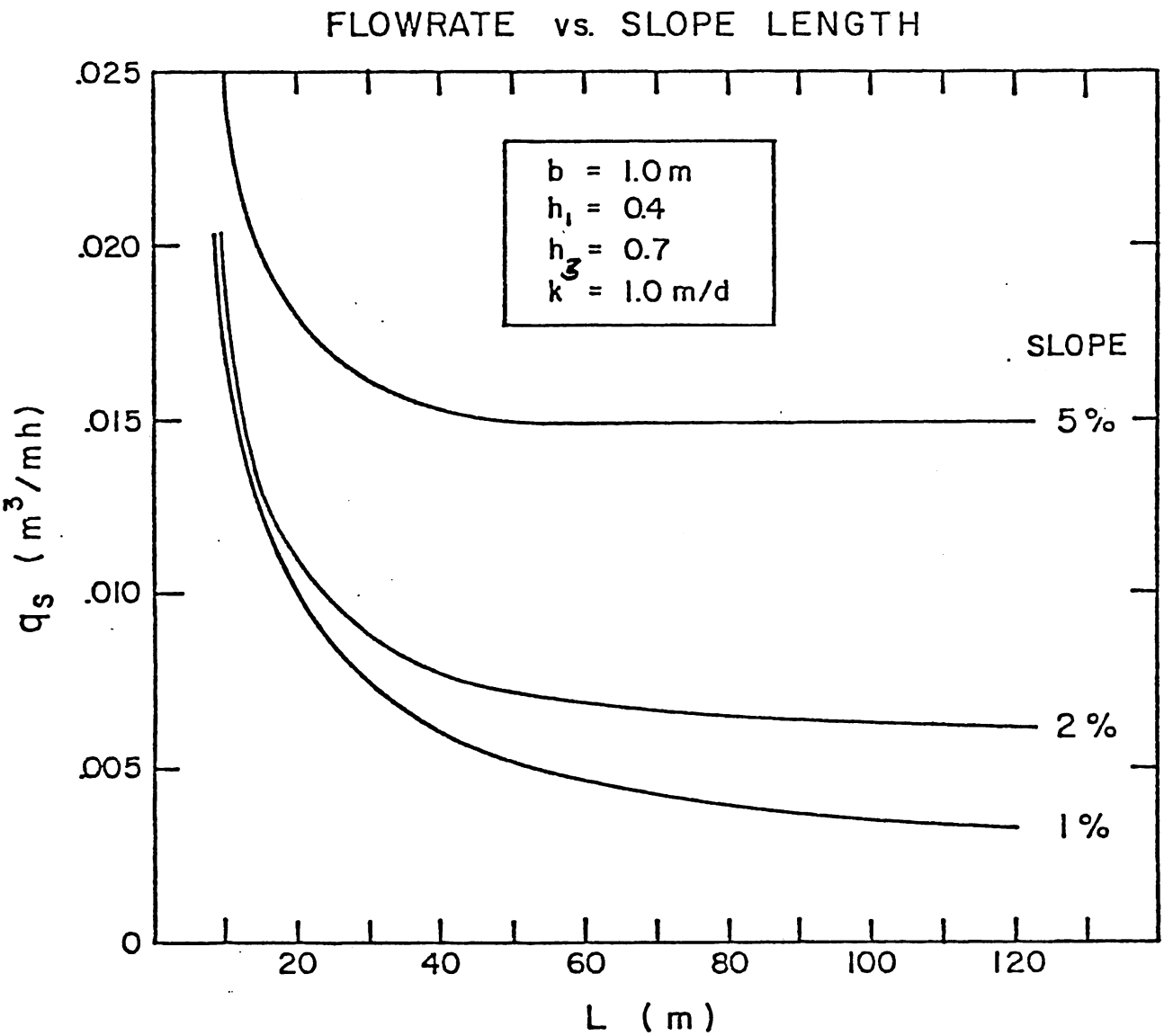

Figure 4-9. Seepage rate versus length to the drainage outlet for a 1 m profile depth with a seasonal high water table of 0.6 m deep.

4.12. A sandy loam soil with K = 10 cm/hr has an impermeable layer 2 m from the surface. Parallel ditches are to be cut all the way to the impermeable layer but will have water standing in them at a depth of 0.4 m; i.e. the water level in the ditches will be 1.6 m from the surface. What ditch spacing will be needed to keep the water table elevation midway between the ditches 0.2 m from the surface for a steady rainfall intensity of 1.0 cm/day?

4.13. Solve problem 4.12 if the soil is layered with the top 1.6 m having K = 5 cm/hr and the bottom 0.4 m having K = 10 cm/hr.

4.14. Repeat problem 4.12 if the soil is layered with the top 1.0 m having K = 5 cm/hr and the bottom 1.0 m having K = 10 cm/hr.

4.15. A sandy loam with K = 6 cm/hr has an impermeable layer at a depth of 5 m. Drain tubes with a diameter of 15 cm are to be placed at a depth of 1.0 m. If the drain tubes are completely open with the water level at the midpoint in the drain, what drain spacing would be needed to keep the water table midway between the drains 0.3 m from the surface for a drainage coefficient of 0.75 cm/day?

4.16. If the tube drains in problem 4.15 are replaced with open ditches, 0.60 m wide and 1.2 m deep (the water level in the ditch is 1.0 m from the surface), what would the drain spacing need to be to accomplish the same results?

4.17. The situation shown below is set up in the lab to measure flow from a cylindrical source to a drain tube. When the drain tube was completely open, i.e. permeable sidewalls, the flow as 10 gal/min. When a conventional 5 inch tube, with wall openings equivalent to 2% of the total wall area, was placed in the setup, the flow rate was 6 gal/min. What is the effective radius of the conventional tube.

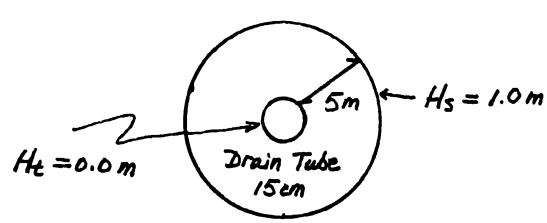

4.18. If the conventional drain tube in problem 4.17 is substituted for the tube in problem 4.15, what drain spacing would be required?

4.19. Rework problem 4.18 for layered soils.

a. K = 6 cm/hr for depths less than 1 m
K = 3 cm/hr for depths greater than 1 m

b. K = 6 cm/hr for depths less than 1 m
K = 12 cm/hr for depths greater than 1 m but less than 1.5 m
K = 6 cm/hr for depths greater than 1.5 m

c. K = 6 cm/hr for depths less than 0.6 m
K = 3 cm/hr for depths greater than 0.6 m

d. K = 6 cm/hr for depths less than 1 m
K = 3 cm/hr for depths greater than 1 m but less than 1.5 m
K = 6 cm/hr for depths greater than 1.5 m

4.20. A loamy sand soil has a hydraulic conductivity of 20 cm/hr. Conventional 4-inch drains, with an effective radius of 5.1 mm, are placed 1 m deep to be used for both drainage and subirrigation. Depth of soil to the impermeable layer is 6.0 m. If the head at the drains is to be maintained at a level 0.6 m below the surface (0.4 m above the drain center), what drain spacing will be needed to sustain a midpoint water table depth of 1.0 m for a steady ET of 5 mm/day.

4.21. Using the drain spacing obtained and other conditions given in problem 4.20, find the maximum ET rate that could be sustained for the following midpoint water table depths, Z_m. Assume that the roots are deep so that the system is not limited by lack of upward water movement.

a. Z_m = 0.5 m

b. Z_m = 1.0 m

c. Z_m = 1.5 m

d. Z_m = 2.0 m

e. Z_m = 3.0 m

f. Z_m = 4.0 m

g. Z_m = 5.0 m

h. Z_m = 6.0 m

CHAPTER 5

Unsteady Flow-The D-F Assumptions

CHAPTER 5

UNSTEADY FLOW - THE D-F ASSUMPTIONS

In the previous chapter we used the D-F assumptions to characterize steady flow situations. While it is sometimes appropriate to assume steady flow for the design of water management systems, steady state conditions are seldom found in nature. This is particularly true in humid regions where water table positions near the surface are continually changing both with respect to time and lateral position. In this chapter we will discuss methods for characterizing the movement and storage of water in soil and transient conditions. Emphasis is placed on drainage situations but the same procedures may be used for other subsurface water movement problems.

5.1. The Governing Equations

Consider the drainage problem shown in Figure 5-1. The water table is initially horizontal at a distance, h_o, above the impermeable layer. At time, t = 0, the water level in the drains is dropped to a distance d above the impermeable layer and drainage begins.

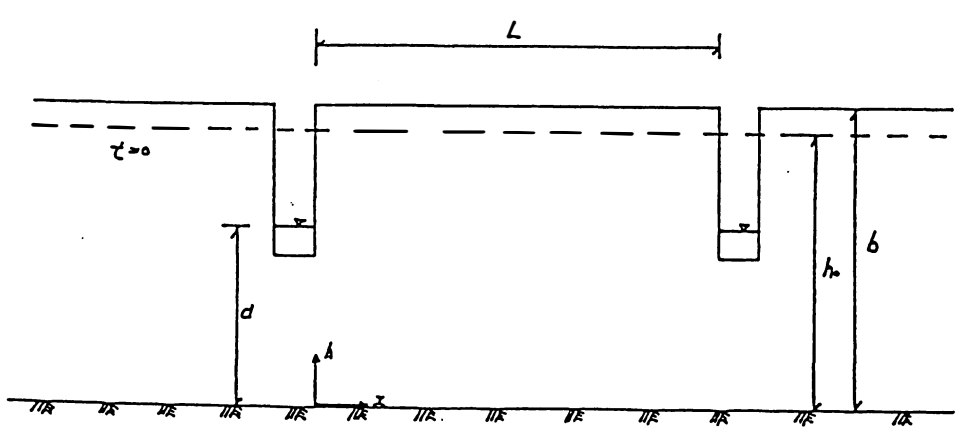

Figure 5-1.

The most complete way of characterizing water movement for this case would be to use the two-dimensional Richards equation for saturated and unsaturated flow as the G.P.D.E. However the use of this equation requires definition of the soil water characteristic $h(\theta)$ and the hydraulic conductivity function, $K(\theta)$. $K(\theta)$ is hard to determine, especially a field effective relationship, because of field variation and the inexact methods for determining $K(\theta)$ <u>in situ</u>. An alternative approach is to simplify the treatment of subsurface flow by making the D-F assumption and expanding the development of equation (4.6) to include nonsteady conditions.

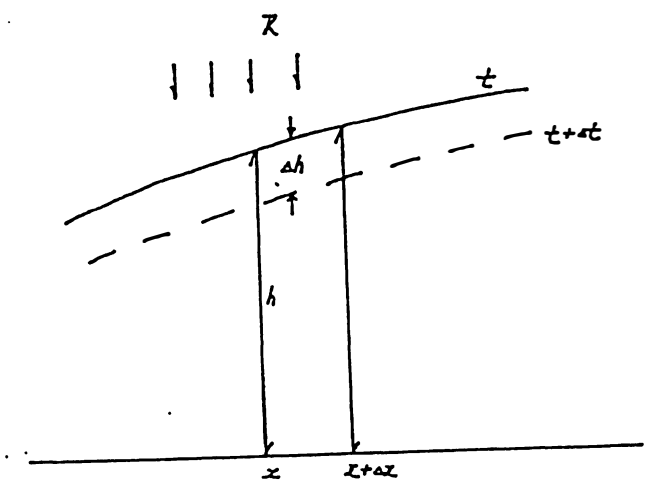

Figure 5-2.

Consider a mass balance on the elemental volume shown in Figure 5-2. The water table elevation changes by Δh during time Δt. If the drainable porosity is f, the water volume below the water table gains or loses (depending on whether the water table rises or falls) a volume of water equal to $f\ \Delta h\ A$ during Δt where A is the surface area of the elemental volume. Then a mass balance may be written as

$$f\ \Delta h\ A = Q|_x\ \Delta t - Q|_{x+\Delta x}\Delta t + R\ A\ \Delta t$$

For a unit width, A = Δx. So dividing through by A Δt gives

$$f\frac{\Delta h}{\Delta t} = \frac{Q|_x - Q|_{x+\Delta x}}{\Delta x} + R$$

Then for Δx → 0 and Δt → 0 we have

$$f\frac{\partial h}{\partial t} = -\frac{\partial Q}{\partial x} + R \tag{5.1}$$

Where Q is the total flowrate in the x direction and may be written (4.1) as, Q = -Kh dh/dx. Substituting into (5.1) yields,

$$f\frac{\partial h}{\partial t} = K\frac{\partial}{\partial x}\left[h\frac{\partial h}{\partial x}\right] + R \tag{5.2}$$

which is called the Boussinesq equation for unsteady flow.

Note that the use of the Boussinesq equation accepts the D-F assumptions and further assumes that water in the amount of f dh is released immediately from the unsaturated zone as the water table falls. Errors caused by these approximations will depend on the soils and boundary conditions involved; i.e. the magnitude of the errors will be case dependent. However solutions to (5.2) are much easier to obtain than for the more rigorous Richards equation for two-dimensional, saturated-unsaturated flow.

Comparison of the two alternatives were made by Skaggs and Tang (1976) in an ASCE article "Saturated and Unsaturated Flow to Parallel Drains" (ASCE J. Irr. & Drain Div., Vol. 102(IR2):221-237 errata: Vol. 102(IR3):399-402). The results indicate that, at

least for many cases, there is good agreement between the predictions of these two models. Since solutions to the Boussinesq equation are much easier to obtain and the soil properties required easier to define, this approach is presently favored for field application.

Then following the Boussinesq approach the G.P.D.E. is equation (5.2), and the boundary conditions may be written as

$$h = h_o \quad , \qquad 0 \leq x \leq L \quad , \qquad t = 0 \tag{5.3a}$$

$$h = d \quad , \qquad x = 0 \quad , \qquad t > 0 \tag{5.3b}$$

$$\frac{\partial h}{\partial x} = 0 \quad , \qquad x = \frac{L}{2} \quad , \qquad t \geq 0 \tag{5.3c}$$

5.2. Solutions to Linear Form of Boussinesq Equation

There have been numerous methods used to solve equation (5.1) subject to boundary conditions (5.2). Some of these are referred to in the article "Drawdown Solutions for Simultaneous Drainage and ET" (ASCE, J. Irr. & Drain, Vol. 101(IR4):279-297, 1975) which you have been asked to review. The first solution for drawdown was presented by Glover, (Dunn, 1954) who used the method of separation of variables for the case where R = 0. If we assume that the total variation of h is small when compared to L we may write a first approximation of (5.2) as,

$$f\frac{\partial h}{\partial t} = K\frac{\partial}{\partial x}\left(\bar{h}\,\frac{\partial h}{\partial x}\right) \tag{5.4}$$

where $\bar{h}$ is the mean value of h.

Then equation (5.4) is a linear equation and may be solved by separation of variables. First the G.P.D.E. and boundary conditions are written as follows:

$$\frac{\partial h}{\partial t} = \frac{K\bar{h}}{f}\frac{\partial^2 h}{\partial x^2} \tag{5.5}$$

$$h = h_o \quad , \quad t = 0 \quad , \quad 0 \leq x \leq L \tag{5.6a}$$

$$\frac{\partial h}{\partial x} = 0 \quad , \quad t \geq 0 \quad , \quad x = L/2 \tag{5.6b}$$

$$h = d \quad , \quad t > 0 \quad , \quad x = 0 \tag{5.6c}$$

In order to simplify the boundary conditions let $g = h - d$ and $\alpha = K\bar{h}/f$. Then

$$\frac{\partial g}{\partial t} = \alpha \frac{\partial^2 g}{\partial x^2} \tag{5.7}$$

$$g = h_o - d \quad , \quad t = 0 \quad , \quad 0 \leq x \leq L \tag{5.8a}$$

$$\partial g/\partial x = 0 \quad , \quad t \geq 0 \quad , \quad x = L/2 \tag{5.8b}$$

$$g = 0 \quad , \quad t > 0 \quad , \quad x = 0 \tag{5.8c}$$

Let us assume that the solution to (5.7) subject to B.C.S. (5.8) may be written in the form:

$$g = X(\varkappa)\, T(t) \tag{5.9}$$

where X is a function of $\varkappa$ alone and T is a function of t alone.

Then $\frac{\partial g}{\partial t} = X\frac{dT}{dt}$

and $\frac{\partial^2 g}{\partial x^2} = T\frac{d^2X}{dx^2}$

Substituting into (5.6) yields

$$\frac{1}{\alpha T}\frac{dT}{dt} = \frac{1}{X}\frac{d^2X}{dx^2}$$

Since the left side of (5.9) is a function of t alone and the right side is a function of x alone and they are equal, both sides must be equal to a constant, say-λ.

$$\frac{1}{\alpha T}\frac{dT}{dt} = \frac{1}{X}\frac{d^2X}{dx^2} = -\lambda$$

The constant λ may be $\lambda > 0$, $\lambda < 0$, or $\lambda = 0$ and each case should be evaluated. First try $\lambda = 0$.

Then $\frac{1}{X}\frac{d^2X}{dx^2} = 0$

and $X = C_1 x + C_2$. But at $x = 0$, $g = 0$ and therefore $X = 0$ at $x = 0$ (otherwise $T = 0$ at $x = 0$ and since T is not a function of x it would have to be 0 for all values of x, hence a trivial solution). So $C_2 = 0$. $\partial g/\partial x = TdX/dx = 0$ at $x = L/2$. $\therefore dX/dx = C_1 = 0$. Therefore $X = 0$

when $\lambda = 0$ and a trivial solution results. So $\lambda = 0$ does not give a useful solution.

Next try $\lambda = -\mu^2$; i.e., $\lambda < 0$.

Then $d^2X/dx^2 - \mu^2X = 0$

and $X = Ae^{\mu x} + Be^{-\mu x}$

Again at $x = 0$, $g = 0$, so $X = 0 = A + B$. Therefore $B = -A$ and

$$X = A(e^{\mu x} - e^{-\mu x})$$

At $x = L/2$, $\partial g/\partial x = 0$, so $dX/dx = 0$ at $x = L/2$

$$\frac{dX}{dx} = \mu A \left(e^{\mu L/2} + e^{-\mu L/2}\right) = 0$$

But this would require either $\mu = 0$, which we have already examined above,

or $A = 0$, which gives a trivial solution. Therefore $\lambda > 0$. Then $\frac{d^2X}{dx^2} + \mu^2 X = 0$

which has the general solution:

$$X = A \cos \mu x + B \sin \mu x \tag{5.11}$$

At $x = 0$, $g = 0$, so $X = 0$

$$0 = A + 0$$

and $\quad X = B \sin \mu x$

$$\frac{dX}{dx} = B\mu \cos \mu x$$

For $x = L/2$, $\frac{dX}{dx} = 0 = B\,\mu \cos \mu \frac{L}{2}$

This condition will hold for $\mu = \pi/L, 3\pi/L, 5\pi/L, \ldots$

Thus a satisfactory solution is

$$X = B \, Sin \, \frac{n\pi}{L} x, \; n = 1, 3, 5, \ldots \tag{5.12}$$

From the relationship for t we have

$$\frac{dT}{dt} + \alpha\mu^2 T = 0$$

which has the solution

$$T = C \, e^{-\mu^2 \alpha t} \tag{5.13}$$

where C is an arbitrary constant. Substituting equations (5.12) and (5.13) into (5.8) we obtain

$$g(x,t) = D_n \, e^{-\left(\frac{n\pi}{L}\right)^2 \alpha t} \sin\frac{n\pi}{L} x \tag{5.14}$$

where n = 1, 3, 5, ... By superposition we can add the solutions given by the different n values and obtain another solution.

$$g(x,t) = \sum_{n=1,3,5...}^{\infty} D_n \, e^{-\left(\frac{n\pi}{L}\right)^2 \alpha t} \sin \frac{n\pi}{L} x$$

(5.15)

The only remaining task is to define the coefficients, D_n, so that equation (5.15) will satisfy the initial conditions, $g(x,0) = h_o - d$. Substitution into (5.15) with $t = 0$ yields,

$$h_o - d = \sum_{n=1,3,5...}^{\infty} D_n \sin \frac{n\pi}{L} x$$

(5.16)

The right side of equation (5.16) is a Fourier sine series representation of $h_o - d$. The values of the coefficients D_n may be obtained by multiplying both sides by $\sin \frac{m\pi x}{L} dx$ and integrating between the limits of $x = 0$ to $x = L$.

$$\int_0^L (h_o - d) \, Sin \frac{m\pi x}{L} \, dx = \sum_{n=1,3,5...}^{\infty} D^n \int_o^L \sin \frac{n\pi x}{L} \sin \frac{m\pi x}{L} \, dx$$

But $\int_0^L \sin \frac{n\pi x}{L} \sin \frac{m\pi x}{L} \, dx = 0 \quad for \; m \neq n$

$$= \frac{L}{2} \quad for\ m = n$$

Therefore by choosing values of m = 1,3,5,... we can determine D_n as

$$D_n = \frac{2}{L} \int_o^L (h_o - d) \sin\frac{n\pi}{L} x\, dx$$

$$D_n = \frac{2}{L} (h_o - d) \left(\frac{-L}{n\pi}\right) \cos \frac{n\pi}{L} x \Big|_o^L$$

$$\text{or } D_n = \frac{4(h_o - d)}{n\pi}, \ n = 1,3,5,... \tag{5.17}$$

Recall that h = g + d so the solution may be written as,

$$h = d + \sum_{n=1,3,5...}^{\infty} D_n\, e^{-\left(\frac{n\pi}{L}\right)^2 \frac{K\bar{h}}{F} t} \sin \frac{n\pi}{L} x$$

(5.18)

where D_n is given by (5.17). The flux at any point can be obtained from $q = -K\frac{dh}{dx}$ where

dh/dx may be determined by differentiating (5.18) term by term. The flowrate entering from one side of the drain per unit length of drain is

$$Q_{1/2} = -Kh \frac{dh}{dx}\Big|_{x=0}$$

(5.19)

So $Q = 2\, Q_{1/2} = -2Kh \frac{dh}{dx}\Big|_{x=0}$

$$\frac{dh}{dx} = \sum_{n=1,3,5,\ldots}^{\infty} D_n\, e^{-\left(\frac{n\pi}{L}\right)^2 \frac{K\bar{h}}{f} t} \left(\frac{n\pi}{L}\right) \cos \frac{n\pi}{L} x$$

at $x = 0$ $\cos \frac{n\pi}{L} x = 1$ and $h = d$

$$Q = -2K\, d \sum_{n=1,3,5,\ldots}^{\infty} D_n \frac{n\pi}{L} e^{-\left(\frac{n\pi}{L}\right)^2 \frac{K\bar{h}}{f} t}$$

(5.20)

In using equation (5.18) and (5.20) it should be remembered that they are subject to the D-F assumptions plus assumptions necessary to linearize the Boussinesq equation. Further, it is assumed that flow in the unsaturated zone above the water table is negligible and as the water table falls, water is instantly released with a drainable porosity of f. More accurate methods than those given above will be discussed in later sections of this chapter. However the solution by separation of variables given above demonstrates a very useful

method and was the method used by Glover in the early 1950's to derive the first transient drain spacing equation. Glover's drain spacing equation may be obtained by using the first term of equation (5.18) and evaluating at x = L/2.

$$h = d + \frac{4(h_o - d)}{\pi} e^{-\left(\frac{\pi}{L}\right)^2 \frac{K\bar{h}}{f} t}$$

Rearranging and taking ln of both sides gives

$$\ln\left[\frac{\pi}{4}(h - d)/(h_o - d)\right] = -\frac{\pi^2}{L^2}\frac{K\bar{h}}{f}t$$

or

$$L = \left\{\frac{K\bar{h}}{f}\pi^2 t/\ln\left[\frac{4}{\pi}(h_o - d)/(h - d)\right]\right\}^{1/2} \tag{5.21}$$

where L is the drain spacing required to lower the water table at x = L/2 from h_o to h in time t. Recall that $\bar{h} = (h_o + d)/2$.

Many other drain spacing equations and methods have been derived since Glover's first equation. A few of these methods will be discussed subsequently in this chapter. Others can be found in the references provided.

5.3. Solutions to the Linearized Boussinesq Equation for $R \neq 0$.

The solution obtained in the previous section was for R = 0. When the Boussinesq is linearized by using a constant flow depth, $\bar{h}$, the resulting G.P.D.E. is homogeneous. For $R \neq 0$ the linearized form is

$$f \frac{\partial h}{\partial t} = K\bar{h}\frac{\partial^2 h}{\partial x^2} + R$$

In nondimensional form the equation may be written as,

$$\frac{\partial H}{\partial \tau} = \bar{H}\frac{\partial^2 H}{\partial \xi^2} + \mu \tag{5.22}$$

where $H = h/h_o$, $\xi = x/L$, $\tau = \frac{Kho}{fL^2}t$, $\mu = \frac{RL^2}{Kh_o^2}$, and $\bar{H} = (1 + D)/2$.

For drainage from an initially horizontal water table, the boundary and initial conditions are:

$$H = 1 \quad , \quad \tau = 0 \quad , \quad 0 \leq \xi \leq 1 \tag{5.23a}$$

$$\frac{\partial H}{\partial \xi} = 0 \quad , \quad \tau \geq 0 \quad , \quad \xi = ½ \tag{5.23b}$$

$$H = D \quad , \quad \tau > 0 \quad , \quad \xi = 0 \tag{5.23c}$$

We can make the boundary conditions "homogeneous" by the transformation

J = H - D. Then

$$\frac{\partial J}{\partial \xi} = \overline{H}\,\frac{\partial^2 J}{\partial \xi^2} + \mu \tag{5.24}$$

with boundary conditions

$$J = 1\text{-}D, \quad , \quad \tau = 0 \quad , \quad 0 \le \xi \le 1 \tag{5.25a}$$

$$\frac{\partial J}{\partial \xi} = 0 \quad , \quad \tau \ge 0 \quad , \quad \xi = ½ \tag{5.25b}$$

$$J = 0 \quad , \quad \tau > 0 \quad , \quad \xi = 0 \tag{5.25c}$$

However the G.P.D.E. (equation (5.24)) is not homogeneous and a further transformation is needed to permit solving by the method of separation of variables. Let $J(\xi,\tau) = G(\xi\ \tau) + \psi(\xi)$. Where ψ is a function of ψ alone and is not yet specified.

Then $\dfrac{\partial J}{\partial \tau} = \dfrac{\partial G}{\partial \tau}$

and $\dfrac{\partial^2 J}{\partial \xi^2} = \dfrac{\partial^2 G}{\partial \xi^2} + \dfrac{d^2 \psi}{\partial \xi^2}$

Therefore $\frac{\partial G}{\partial \tau} = \overline{H}\frac{\partial^2 G}{\partial \xi^2} + \overline{H}\,\frac{d^2\psi}{d\xi^2} + \mu$ (5.26)

And the boundary conditions may be written,

$$G = 1\text{-}D\text{-}\psi(\xi) \qquad \tau = 0 \quad , \qquad 0 \le \xi \le 1 \tag{5.27a}$$

$$\frac{\partial G}{\partial \xi} = \frac{-d\psi}{d\xi} \qquad \tau > 0 \quad , \qquad \xi = ½ \tag{5.27b}$$

$$G = -\psi(0) \qquad \tau > 0 \quad , \qquad \xi = 0 \tag{5.27c}$$

Now we choose $\psi(x)$ such that equation and the boundary conditions are simplified as much as possible. That is let ψ be such that

$$\overline{H}\frac{d^2\psi}{d\xi^2} + \mu = 0$$

$$\frac{d^2\psi}{d\xi^2} = -\frac{\mu}{\overline{H}}$$

Integration yields

$$\frac{d\psi}{d\xi} = -\frac{\mu}{\overline{H}}\,\xi + C_1$$

$$\psi(\xi) = -\frac{\mu}{2\overline{H}}\,\xi^2 + C_1\,\xi + C_2$$

(5.28)

We may choose C_1 and C_2 to simplify the boundary conditions. Let $d\psi/d\xi=0$ at ξ ½.

Then $C_1 = \frac{\mu}{\overline{H}} \cdot \frac{1}{2} = \frac{\mu}{2\overline{H}}$. Also let $\psi(0) = 0$ which would require $C_2 = 0$

and $\psi(\xi) = \frac{\mu}{2\overline{H}} (-\xi^2 + \xi)$ (5.29)

Then the G.P.D.E. may be written as

$$\frac{\partial G}{\partial \tau} = \overline{H} \frac{\partial^2 G}{\partial \xi^2}$$

(5.30)

and the boundary conditions reduce to:

$$G = 1 - D - \frac{\mu}{2\overline{H}} (-\xi^2 + \xi) \qquad \tau = 0 \quad , \qquad 0 \le \xi \le 1 \qquad (5.31a)$$

$$\frac{\partial G}{\partial \xi} = 0 \qquad , \qquad \tau = 0 \quad , \qquad \xi = ½ \qquad (5.31b)$$

$$G = 0 \qquad , \qquad \tau = 0 \quad , \qquad \xi = 0 \qquad (5.31c)$$

Equation (5.30) may be solved subject to boundary conditions (5.31) in the same manner that was used in section 5.3, and the general solution may be written as,

$$G(\tau,\xi) = \sum_{n=1,3,5,\ldots}^{\infty} D_n \, e^{-\overline{H} n^2 \pi^2 \tau} \sin n\pi\xi$$

(5.32)

The values for D_n are found by using the initial condition (5.31a) as was done in the previous section to obtain equation (5.17). This is left for the student to complete (Problem 5-6).

5.4. Other Methods for Predicting Water Table Drawdown

After Glover's initial water table drawdown methods were presented, a number of other approaches were made. One of the most interesting and useful was presented by Bouwer and van Schilfgaarde (1963). They assumed that the rate of water table drawdown midway between drains could be expressed as,

$$f\,dh = \bar{q}\,dt$$

or

$$f\,dm = \bar{q}\,dt$$

$$q_m = C\bar{q}$$

or

$$C = \frac{q_m}{\bar{q}}$$

$$C\,\frac{dm}{dt} = -\frac{P}{f} \tag{5.33}$$

where P is the instantaneous drainage rate, f is the drainable porosity, m is the height of water table midway between drains above the elevation of the drain center and C is a constant that is introduced to account for the change in water table shape, i.e., the fact that the rate of water table drop varies with distance from the drain. One method of determining the drainage rate is to assume that, for any value of m the drainage rate is equal to the rainfall rate that would result in a midpoint water table elevation of m on a steady state basis. In

Chapter 4 we found that the following relationship held for drainage under steady state rainfall,

$$h^2 = -\frac{P}{K}x^2 + \frac{PL}{K}x + d_e^2$$

(5.34)

where d_e is the equivalent depth to the impermeable layer to account for convergence near the drains. At x = L/2 we could relate m to P by Hooghoudt's equation

$$q = \frac{4K_1m^2 + 8d_eK_2m}{L^2}$$

$$h_m^2 = -\frac{P\,L^2}{4K} + \frac{PL^2}{2K} + d_e^2$$

$$\left(h_m^2 - d_e^2\right) = \frac{PL^2}{4K}$$

but $h_m = d_e + m$ and $h_m^2 - d_e^2 = m^2 + 2d_e\,m + d_e^2 - d_e^2$

So $m^2 + 2d_em = \frac{PL^2}{4K}$

and $$P = \frac{4Km(m + 2d_e)}{L^2} \tag{5.35}$$

Substituting (5.35) into (5.33) and integrating we have

$$L^2 = \frac{8K\ t\ d_e}{f \ln\ [m_o\ (m + 2d_e)/m(m_o + 2d_e)]} \tag{5.36}$$

When f is not constant and/or another relationship is used to determine P = P(m), such as a graphical solution, equation (5.33) can be used to predict drawdown in a stepwise manner, as, $\Delta t = -C\ \frac{\Delta mf}{\overline{P}}$ where $\overline{P}$ is the mean value of P for each Δm.

van Schilfgaarde (1963) derived an equation for an initially parabolic water table which may be expressed as,

$$L^2 = \frac{9Ktd}{f \ln \frac{m_o\ (m + 2d)}{m(m_o + 2d)}} \tag{5.37}$$

As in Glover's equation, the D-F assumptions were used so Hooghoudt's equivalent depth is substituted for d in equation (5.37). However, the inherent assumption of a constant flow depth in Glover's solution was avoided in the derivation of equation (5.37).

5.5. Numerical Methods

Because simplifying assumptions are necessary to solve the Boussinesq equation for many boundary conditions of interest, there are advantages to using numerical procedures to predict water table movement. The Boussinesq equation is first written in nondimensional form,

$$\frac{\partial H}{\partial \tau} = \frac{\partial}{\partial \xi}\left[H \frac{\partial H}{\partial \xi}\right] + \mu \tag{5.38}$$

where $H = \dfrac{h}{h_o}$

$\xi = \dfrac{x}{L}$

and $\tau = \dfrac{K h_o t}{f L^2}$

The solution domain; i.e. the range of independent variables for which a solution is desired; is defined by $\tau > 0$, $0 < \xi < 1$. For symmetrical systems such as drainage or subirrigation from parallel drains, we need only the solution for $0 < \xi < ½$. Numerical solutions are obtained by writing (5.38) in finite difference form. The solution domain is shown

schematically in Figure 5-2.

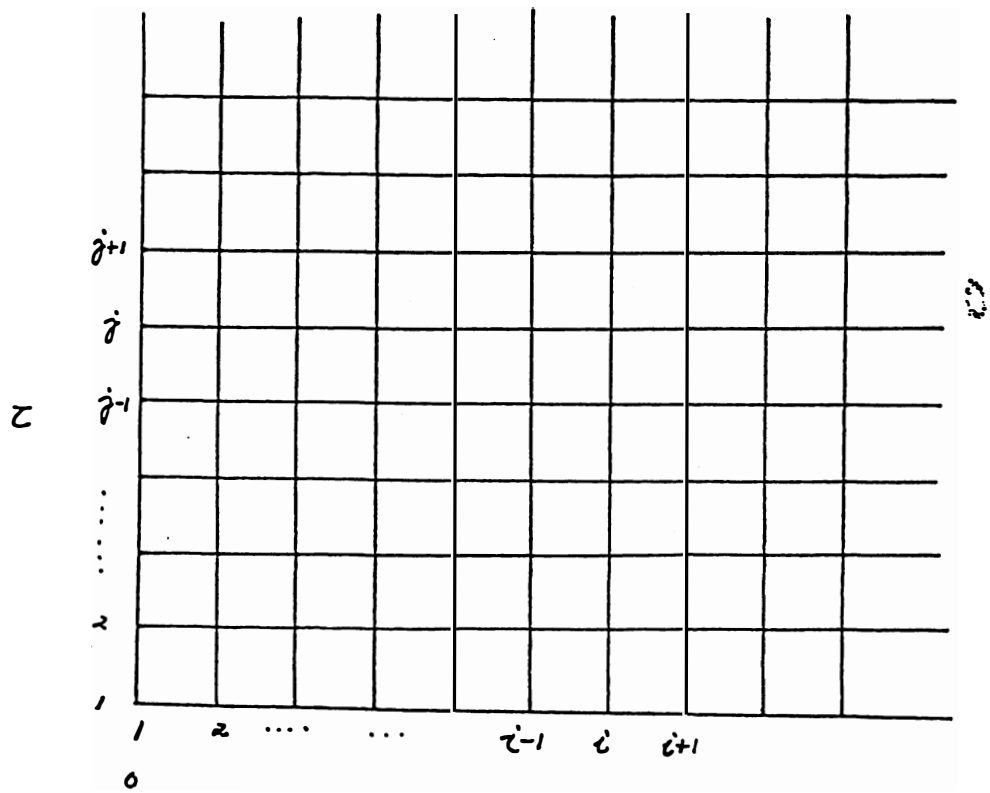

Solution domain for finite difference solutions to the Boussinesq equation.

The τ axis is broken into increments of length $\Delta\tau$ and the ξ axis N increments of length $\Delta\xi$. The number of the increment is designated by i for the ξ axis and j for the τ axis. Then any point $(\tau\xi)$ can be represented by $(j\Delta\tau, i\Delta\xi)$.

There are many ways of formulating a finite difference expression for equation (5.38). The simplest form to solve is the explicitly form in which $\frac{\partial H}{\partial \tau}$ is written as,

$$\frac{\partial H}{\partial \tau} = \frac{dH}{d\tau}\Big|_{\xi = constant} = \frac{H_{i,j} - H_{i,j-1}}{\Delta\tau} \tag{5.39}$$

and the right hand side of (5.38) is written in terms of H at τ_{j-1}. While this finite difference form is easy to solve, it requires very small τ increments and has high computational requirements.

The implicit finite difference form will be used herein. In the implicit form $\partial H/\partial\tau$ is written as given in (5.39) which is termed a backwards difference approximation of $\partial H/\partial\tau$.. Before treating the right side of (3.38) we shall rewrite it in the following form:

$$\frac{\partial H}{\partial \tau} = \frac{\partial}{\partial \xi}\left[G(H)\ \frac{\partial H}{\partial \xi}\right] + \mu$$

where G(H) = H and is defined simply for convenience. Then,

$$\frac{\partial H}{\partial \tau} = G(H)\ \frac{\partial^2 H}{\partial \xi^2} + \frac{\partial G}{\partial \xi}\ \frac{\partial H}{\partial \xi} + \mu \tag{5.40}$$

we can approximate $\partial H/\partial\xi$ by either forward difference,

$$\frac{\partial H}{\partial \xi} = (H_{i+1,j} - H_{i,j})/\Delta\xi \tag{5.41}$$

or by backward difference,

$$\partial H/\partial\xi = (H_{i,j} - H_{i-1,j})/\Delta\xi. \tag{5.42}$$

Taking the average these two approximations we get,

$$\partial H/\partial\xi = (H_{i+1,j} - H_{i-1,j})/2\Delta\xi \tag{5.43}$$

Likewise

$$\partial G/\partial\xi = (G_{i+1,j} - G_{i-1,j})/2\Delta\xi \tag{5.44}$$

We can interpret equation (5.42) as $\partial H/\partial\xi$ at the point (i-½,j) and (5.41) as $\partial H/\partial\xi$ at (i + ½, j). Also we may write $\frac{\partial^2 H}{\partial\xi^2}\Big|_{i,j} = \left(\frac{\partial H}{\partial\xi}\Big|_{i+½,j} - \frac{\partial H}{\partial\xi}\Big|_{i-½,j} \right)/\Delta\xi.$

Then

$$\frac{\partial^2 H}{\partial\xi^2} = (H_{i-1,j} - 2H_{i,j} + H_{i+1,j})/\Delta\xi^2 \tag{5.45}$$

Substituting equation (5.39), (5.43), (5.44) and (5.45) into (5.40) we obtain,

$$(H_{i,j} - H_{i,j-1})/\Delta\tau = G_{i,j}\,(H_{i-1,j} - 2H_{i,j} + H_{i+1,j})/\Delta\xi^2$$

$$+ \frac{(G_{i+1,j} - G_{i-1,j})}{2\Delta\xi} \cdot \frac{(H_{i+1,j} - H_{i-1,j})}{2\Delta\xi} + \mu_{i,j} \tag{5.46}$$

Equation (5.46) may be simplified and written for each interior node (i.e. all notes i, j except for those at the boundary where j=1, i=1, or i = N(ξ=1)) as,

$$A_{i,j}\,H_{i-1,j} + B_{i,j}\,H_{i,j} + C_{i,j}\,H_{i+1,j} = D_{i,j} \tag{5.47}$$

where

$$A_{i,j} = (4\,G_{i,j} + G_{i-1,j} - G_{i+1,j})/4\Delta\xi^2 \tag{5.48a}$$

$$B_{i,j} = -\,2\,G_{i,j}/\Delta\xi^2 - 1/\Delta\tau \tag{5.48b}$$

$$C_{i,j} = (4\,G_{i,j} - G_{i-1,j} + G_{i+1,j})/4\Delta\xi^2 \tag{5.48c}$$

and $$D_{i,j} = -H_{i,j-1}/\Delta\tau - \mu_{i,j} \tag{5.48d}$$

The solution procedure will be demonstrated for the line of nodes at j = 2. Note that H is known at $\tau = 0$ (j=1) from the initial condition. Then for each interior position node we write,

$$A_{2,2}\, H_{1,2} + B_{2,2}\, H_{2,2} + C_{2,2}\, H_{3,2} = D_{2,2} \tag{5.49a}$$

$$A_{3,2}\, H_{2,2} + B_{3,2}\, H_{3,2} + C_{3,2}\, H_{4,2} = D_{3,2} \tag{5.49b}$$

$$A_{4,2}\, H_{3,2} + B_{4,2}\, H_{4,2} + C_{4,2}\, H_{5,2} = D_{4,2} \tag{5.49c}$$

$$A_{5,2}\, H_{4,2} + B_{5,2}\, H_{5,2} + C_{5,2}\, H_{6,2} = D_{5,2} \tag{5.49d}$$

The result is a tridiagonal matrix of N-2 equations in N unknowns. However the boundary conditions $H_{1,2}$ and $H_{N,2}$ are known so $H_{i,2}$ can be solved for each node, i. The coefficients A, B, C, D, are functions of $H_{i,j}$ so they are first evaluated in terms of $H_{i,j-1}$ which is known for all points, i. Then the set of equations (5.49) are resolved using the new coefficients and the coefficients are re-evaluated. This iteration process is continued until the new values obtained are the same as the values assumed or within an acceptable margin of error. Then j is increased by 1 (to j=3) for the above example and $H_{i,3}$ determined by the same procedure.

Solution of the tridiagonal matrix can be easily obtained using the Gaussian elimination method described by Richtmeyer (1963). Because we solve the set of equation (5.49) for a given τ, we will drop the subscript j in the equations that follow. Unless otherwise noted it is assumed that H_i, A_i, etc. are actually $H_{i,j}$, $A_{i,j}$, etc. Now define a set of parameters E_i and F_i such that,

$$H_i = E_i H_{i+1} + F_i \tag{5.50}$$

Then

$$H_{i-1} = E_{i-1} H_i + F_{i-1} \tag{5.51}$$

Substituting (5.51) into (5.47) we obtain,

$$A_i(E_{i-1} H_i + F_{i-1}) + B_i H_i + C_i H_{i+1} = D_i$$

and $$H_1 = \frac{D_i - A_1 F_{i-1}}{B_i + A_i E_{i-1}} - \frac{C_i}{B_i + A_i E_{i-1}} H_{i+1} \tag{5.52}$$

Therefore $$F_i = \frac{D_i - A_i F_{i-1}}{B_i + A_i E_{i-1}} \quad \text{and} \quad E_i = \frac{-C_i}{B_i + A_i E_{i-1}} \tag{5.53}$$

If H is known at the boundary ($\xi = 0$, $i = 1$) equation (5.49) may be written,

$$A_2 H_1 + B_2 H_2 + C_2 H_3 = D_2$$

and $$H_2 = -\frac{C_2}{B_2} H_3 + \frac{D_2 - A_2 H_1}{B_2} \tag{5.54}$$

Therefore $E_2 = -C_2/B_2$ and $F_2 = \dfrac{D_2 - A_2 H_1}{B_2}$

From (5.53) $E_2 = \dfrac{-C_2}{B_2 + AE_1}$ so $E_1 = 0$

and $F_2 = \dfrac{D_2 - A_2 F_1}{B_2}$ so $F_1 = H_1$

Now that E_2 and F_2 are known, $E_3, E_4, \ldots E_{N-1}$ and $F_3, F_4, \ldots F_{N-1}$ can be calculated in terms of the coefficients A_i, B_i, C_i, D_i and the E_{i-1}, F_{i-1} values. That is, we can define the array (E_i, F_i) from i=1 to N-1. If the boundary condition is known at ξ=1 (i=N) we can then determine H_i by simply starting at i = N-1 as,

$$H_{N-1} = E_{N-1} H_N + F_{N-1} \tag{5.55}$$

$$H_{N-2} = E_{N-2} H_{N-1} + F_{N-2}$$

And march thusly back to i = 2 where

$$H_2 = E_2 H_3 + F_2$$

Therefore the numerical procedure may be summarized as follows:

1. Starting with j=2 define the coefficients A_i, B_i, C_i, and D_i for all interior nodes i = 1 to N-1. Because these coefficients are a function of H_i which is unknown, assume $H_{i,j} = H_{i,j-1}$ for the first iteration.
2. Determine E_i and F_i for i=2 to i=N-1 using equation (5.53) and the fact that $E_i = 0$ and $F_i = H_i$ for a constant H at $\xi = 0$.
3. Determine H_i for i = N-1 to i = 2 using the E_i and F_i values obtained in 2 above and equation (5.50).
4. Re-evaluate the coefficients using the new H_i values obtained in 3.
5. Compare coefficients from 4 with those assumed in 1. If they are equal or within acceptable limits go to 6 below. Otherwise make another iteration, go to 2 above and repeat steps 2-5.
6. You now have a solution for $H_{i,j}$, increment τ by $\Delta\tau$ (i.e. increase j to j+1 and go to 1 above). Repeat until solutions are obtained for the desired range of τ.

5.6 Results of Numerical Solution to the Boussinesq Equation.

Results of numerical solutions to the Boussinesq equation for an initially horizontal water table can be plotted in nondimensional form for general application. Methods described in section 5.5 above were used to obtain solutions for parallel ditch drains (cases c and d in Figure 5.3) for a range of nondimensional drain depth and μ values. Solutions were obtained for both drainage and subirrigation. Similar methods were used for the case

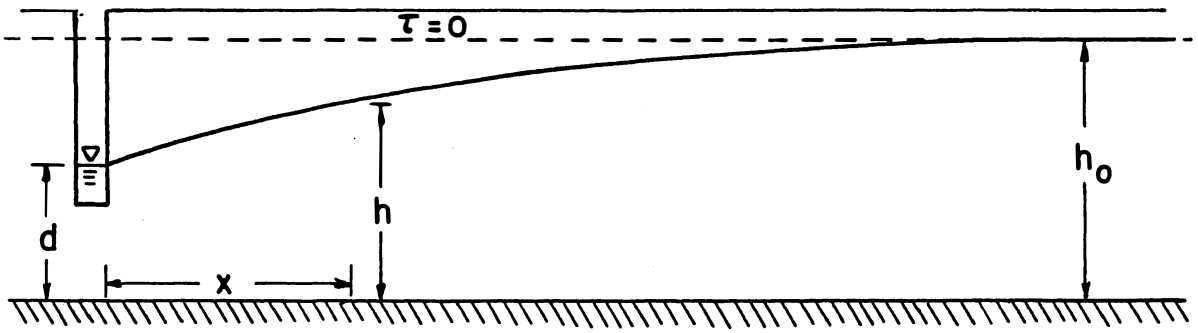

CASE a. DRAWDOWN BY A SINGLE DRAIN IN A SEMI - INFINITE MEDIUM

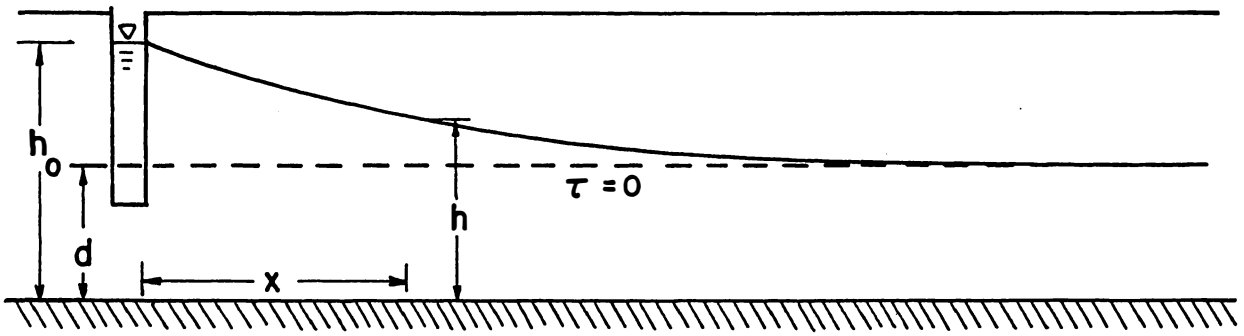

CASE b. WATER TABLE RISE FROM A SINGLE DRAIN IN A SEMI-INFINITE MEDIUM

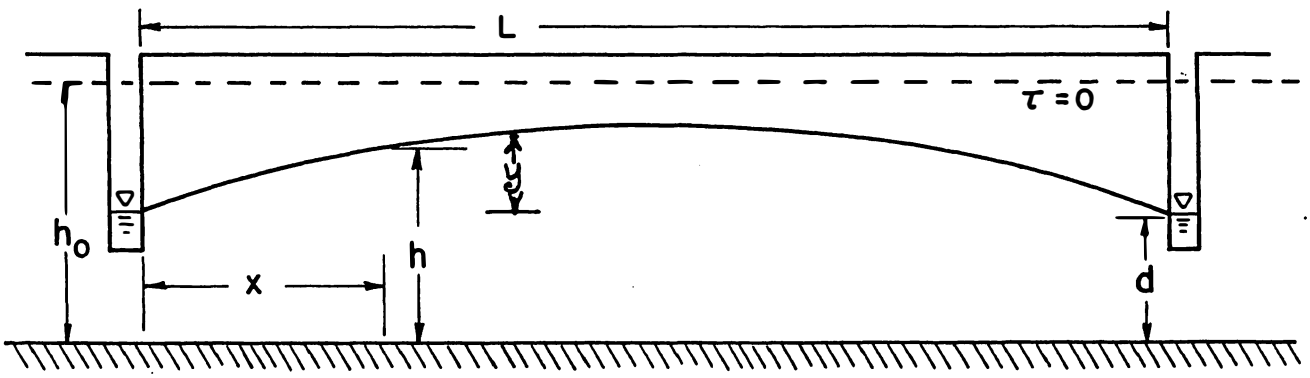

CASE c. DRAWDOWN BY PARALLEL DRAINS

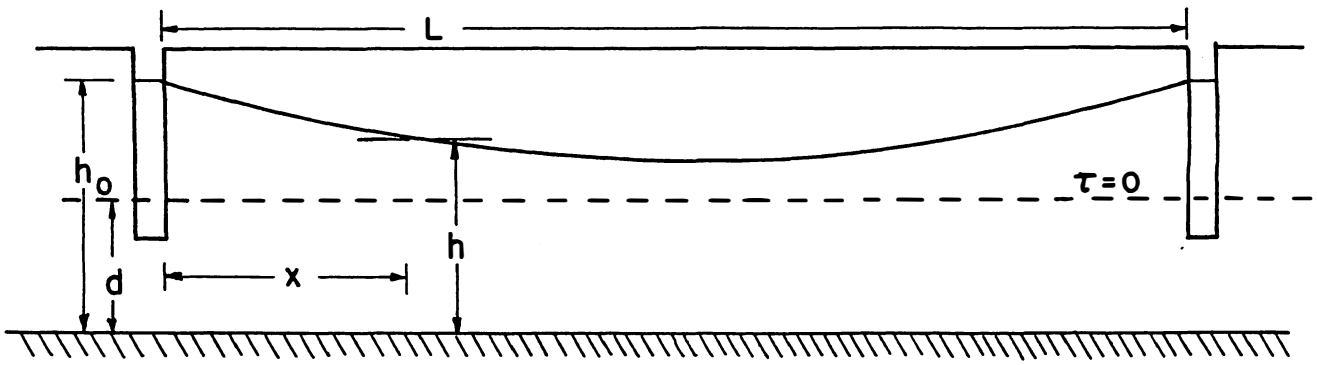

CASE d. WATER TABLE RISE FROM PARALLEL DRAINS

Figure 5.3

of a single drain (cases a and b in Figure 5.3). The methods for the single drain are described in detail in the following paper:

> Skaggs, R.W. 1976. Determination of the hydraulic conductivity-drainable porosity ratio from water table measurements. Trans. Of the ASAE, Vol. 19(1):73-80.

Solutions for both draining profiles (case a) and rising water table profiles (case b, subirrigation) are plotted in Figure 5.4 for the case of a single drain with μ=0. These solutions are appropriate for very widely spaced drains (semi-infinite drain spacing).

Solutions for both draining (case c) and rising (subirrigation, case d) profiles at the midplane between drains, X/L=0.5, are plotted in Figure 5.5 for μ=0. The resolution for large D values is not very good on such plots. Resolution can be improved by making the transformation y=h-d and plotting Y=y/yo rather than H=h/ho. This was done for a range of μ values for X/L=0.5 (Figures 5.6-5.10), for X/L=0.25 (Figures 5.11-5.15) and for X/L=0.10 (Figures 5.16-5.20). Similar plots were generated for subirrigation as shown in Figure 5.21 for X/L=0.5 and μ=-3.0.

The plotted solutions in Figure 5.5 through 5.21 were a convenient form of presenting and applying results of the numerical solutions when we first obtained them in the mid-1970s. Today's fast, portable computers make it possible to directly obtain solutions for the specific case of interest, i.e. the specific D and μ values. However, the plotted solutions provide a convenient visual representation of the solutions and can be used to obtain quick solutions by hand.

Note that the solutions plotted in Figures 5.5 through 5.21 have not been corrected

for convergence near the drain. This correction may be very substantial for some cases when drain tables are used. It can be done by replacing d by d_e as discussed in the previous chapter. This requires recalculation of h_o as well as $D=d_e/h_o$.

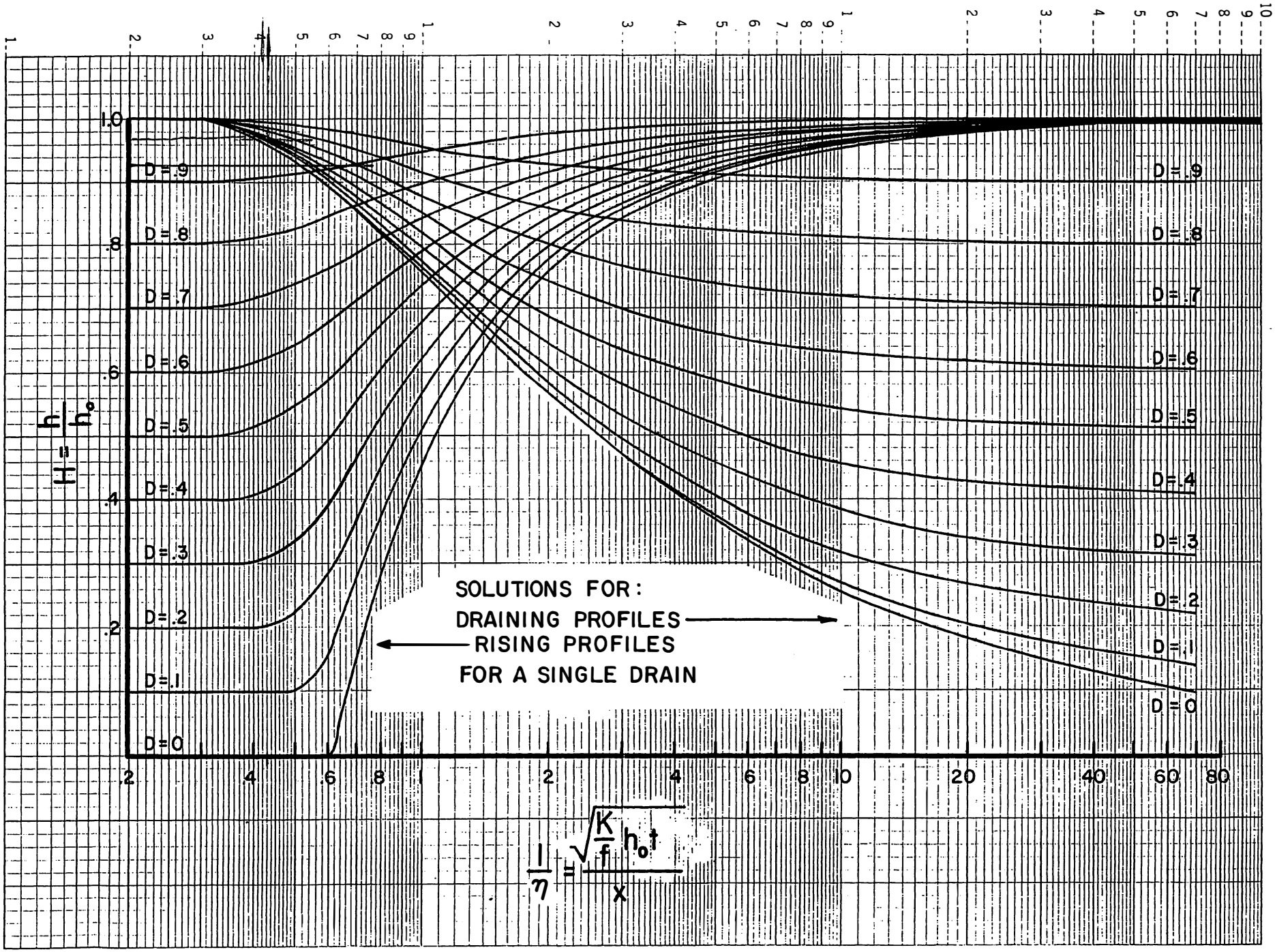
SOLUTIONS FOR:
DRAINING PROFILES
RISING PROFILES
FOR A SINGLE DRAIN
D = .9
D = .8
D = .7
D = .6
D = .5
D = .4
D = .3
D = .2
D = .1
D = 0
$H = \frac{h}{h_o}$
$\frac{1}{\eta} = \frac{\sqrt{\frac{K}{f} h_o t}}{x}$

Figure 5.4

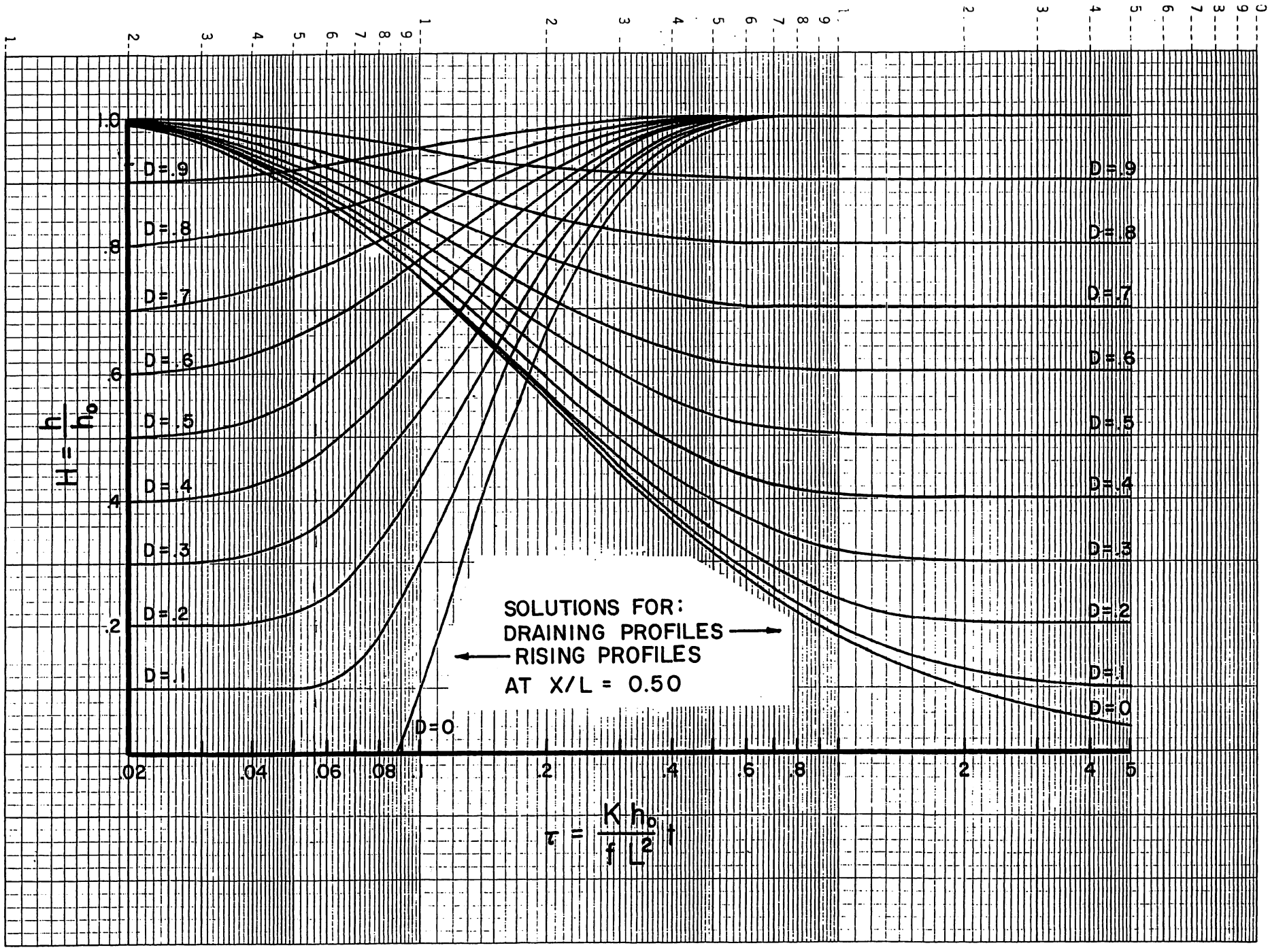
SOLUTIONS FOR:
DRAINING PROFILES →
← RISING PROFILES
AT X/L = 0.50
D=.9
D=.8
D=.7
D=.6
D=.5
D=.4
D=.3
D=.2
D=.1
D=0
$H = \frac{h}{h_o}$
$\tau = \frac{K h_o}{f L^2} t$

Figure 5.5

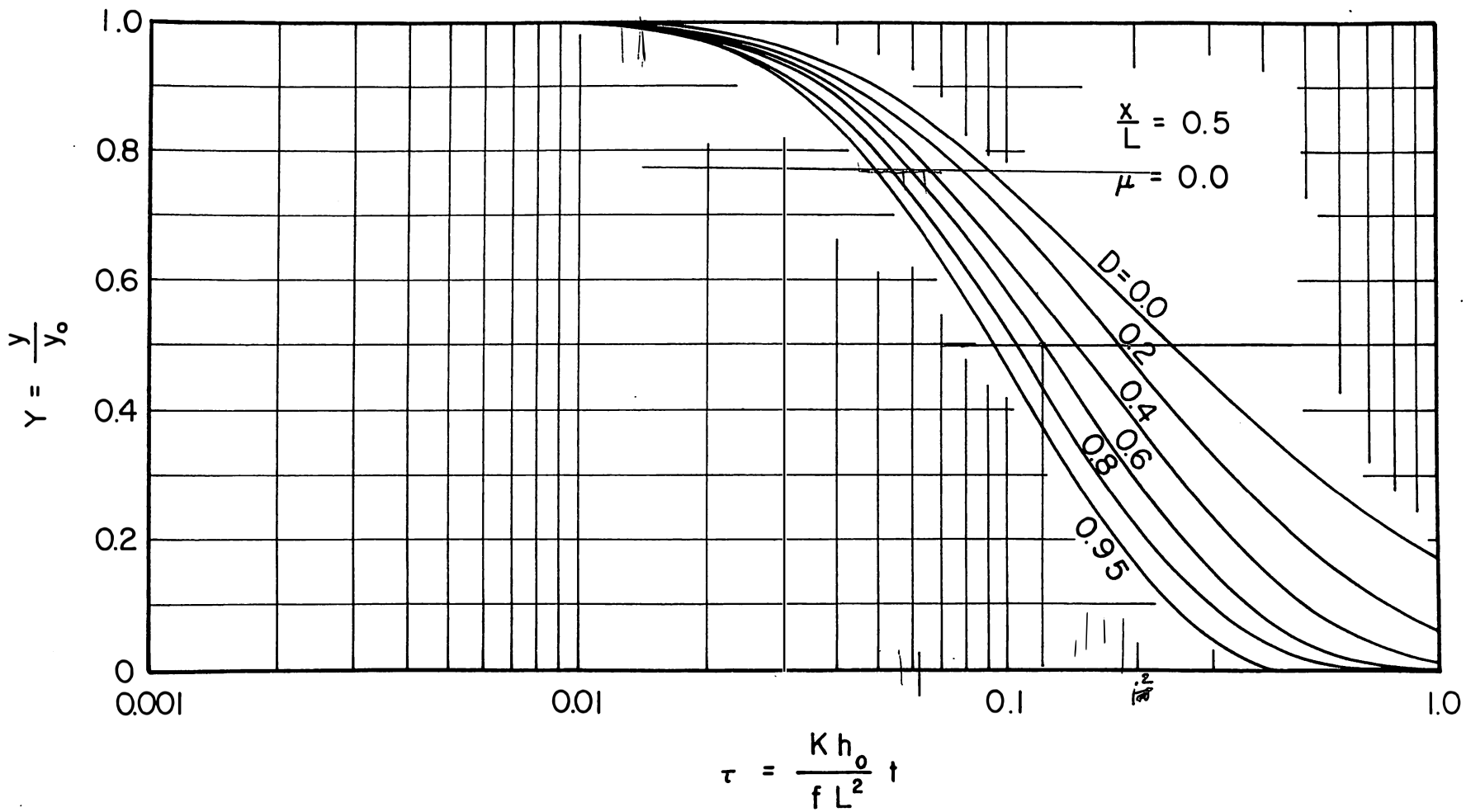
1.0
0.8
0.6
0.4
0.2
0
0.001
0.01
0.1
1.0
$Y = \frac{y}{y_o}$
$\tau = \frac{K h_o}{f L^2} t$
$\frac{x}{L} = 0.5$
$\mu = 0.0$
D=0.0
0.2
0.4
0.6
0.8
0.95

Figure 5.6

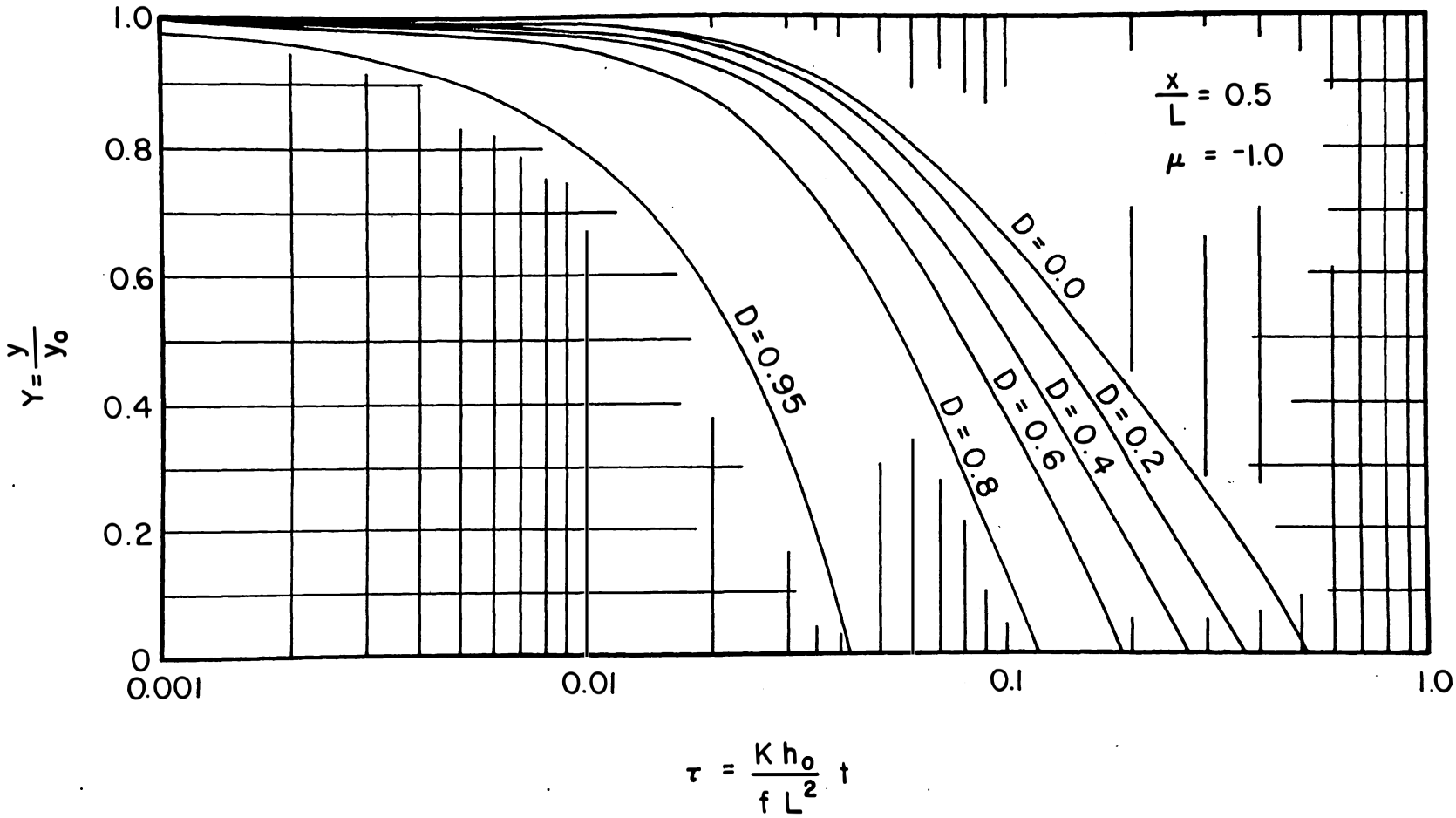
1.0
0.8
0.6
0.4
0.2
0
0.001
0.01
0.1
1.0
$\frac{x}{L} = 0.5$
$\mu = -1.0$
D=0.0
D=0.2
D=0.4
D=0.6
D=0.8
D=0.95
$Y = \frac{y}{y_0}$
$\tau = \frac{K h_0}{f L^2} t$

Figure 5.7

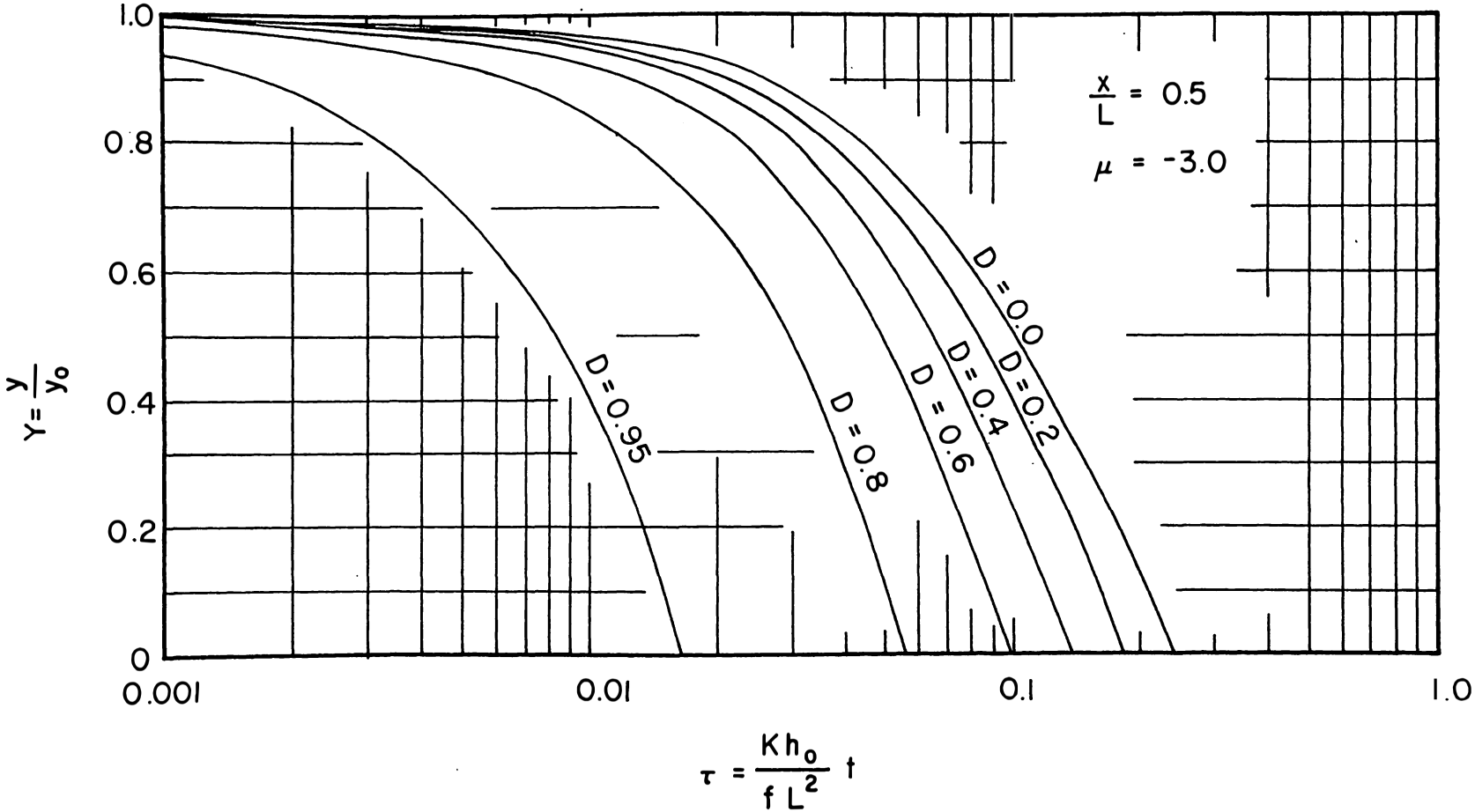
1.0
0.8
0.6
0.4
0.2
0
0.001
0.01
0.1
1.0
$\frac{x}{L} = 0.5$
$\mu = -3.0$
D = 0.0
D = 0.2
D = 0.4
D = 0.6
D = 0.8
D = 0.95
$Y = \frac{y}{y_o}$
$\tau = \frac{K h_o}{f L^2} t$

Figure 5.8

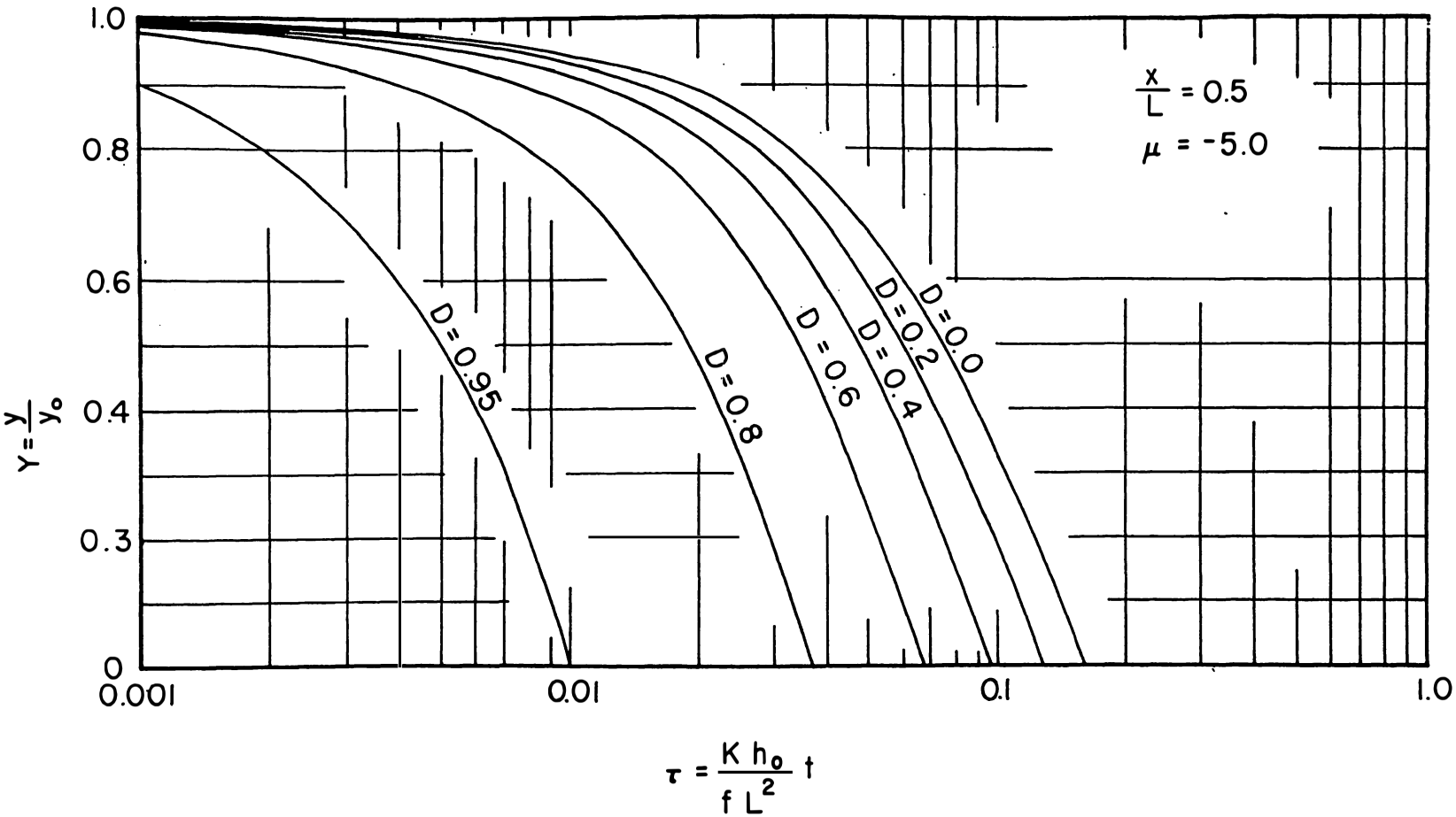
1.0
0.8
0.6
0.4
0.3
0
0.001
0.01
0.1
1.0
$Y = \frac{y}{y_o}$
$\tau = \frac{K h_o}{f L^2} t$
$\frac{x}{L} = 0.5$
$\mu = -5.0$
D=0.95
D=0.8
D=0.6
D=0.4
D=0.2
D=0.0

Figure 5.9

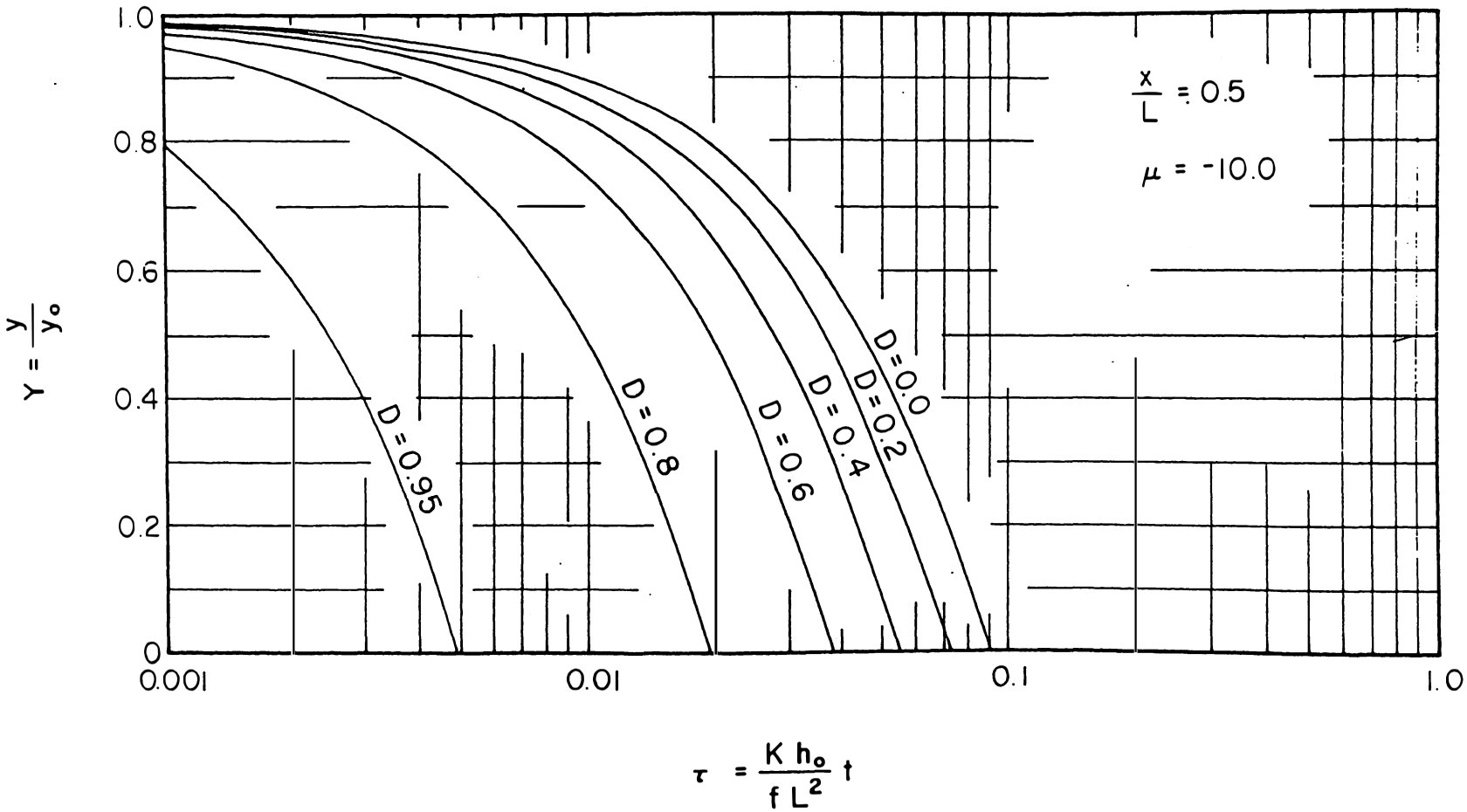
1.0
0.8
0.6
0.4
0.2
0
0.001
0.01
0.1
1.0
$Y = \frac{y}{y_o}$
$\tau = \frac{K h_o}{f L^2} t$
$\frac{x}{L} = 0.5$
$\mu = -10.0$
D=0.95
D=0.8
D=0.6
D=0.4
D=0.2
D=0.0

Figure 5.10

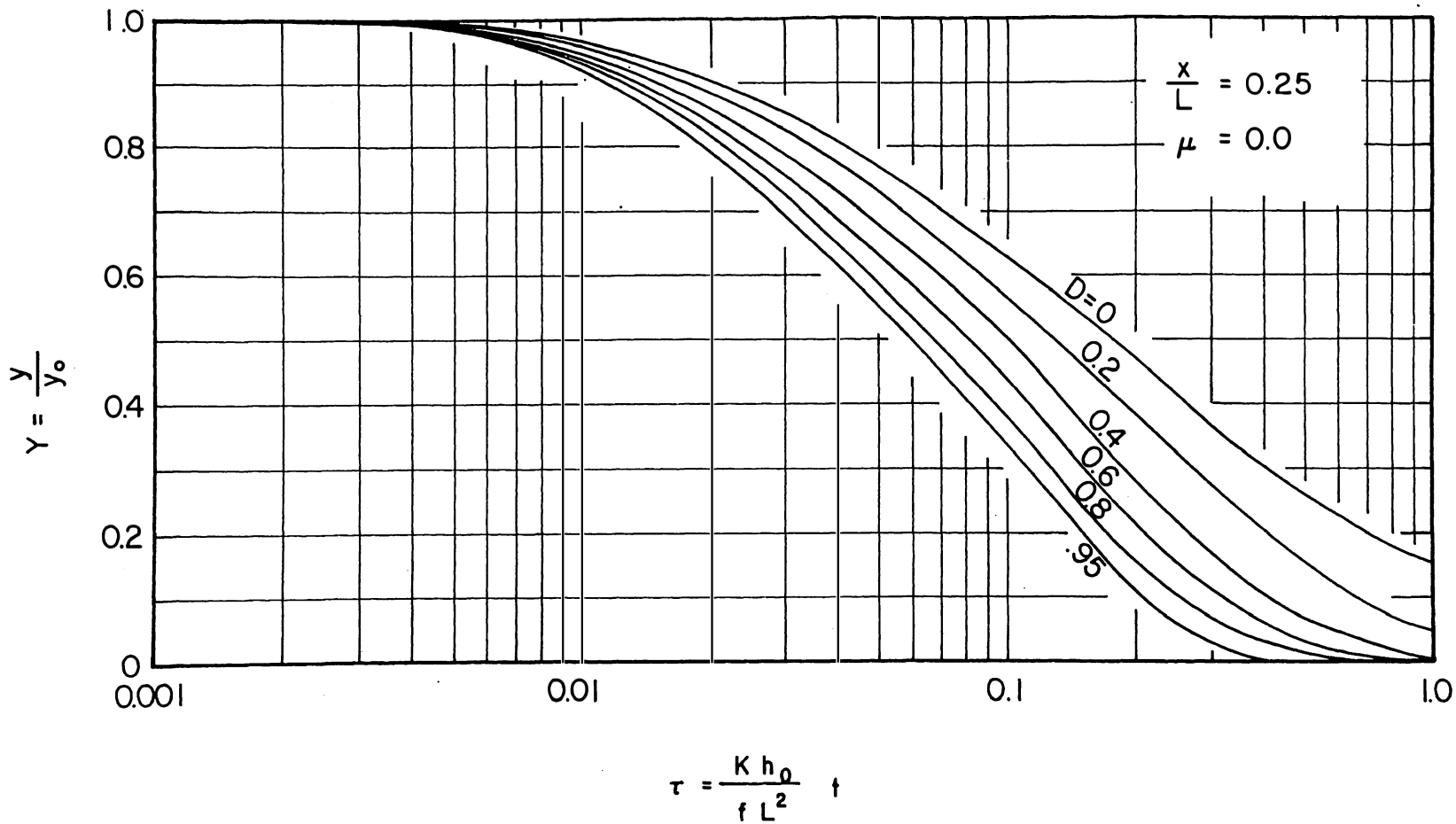
1.0
0.8
0.6
0.4
0.2
0
0.001
0.01
0.1
1.0
$Y = \frac{y}{y_o}$
$\tau = \frac{K h_o}{f L^2} t$
$\frac{x}{L} = 0.25$
$\mu = 0.0$
D=0
0.2
0.4
0.6
0.8
.95

Figure 5.11

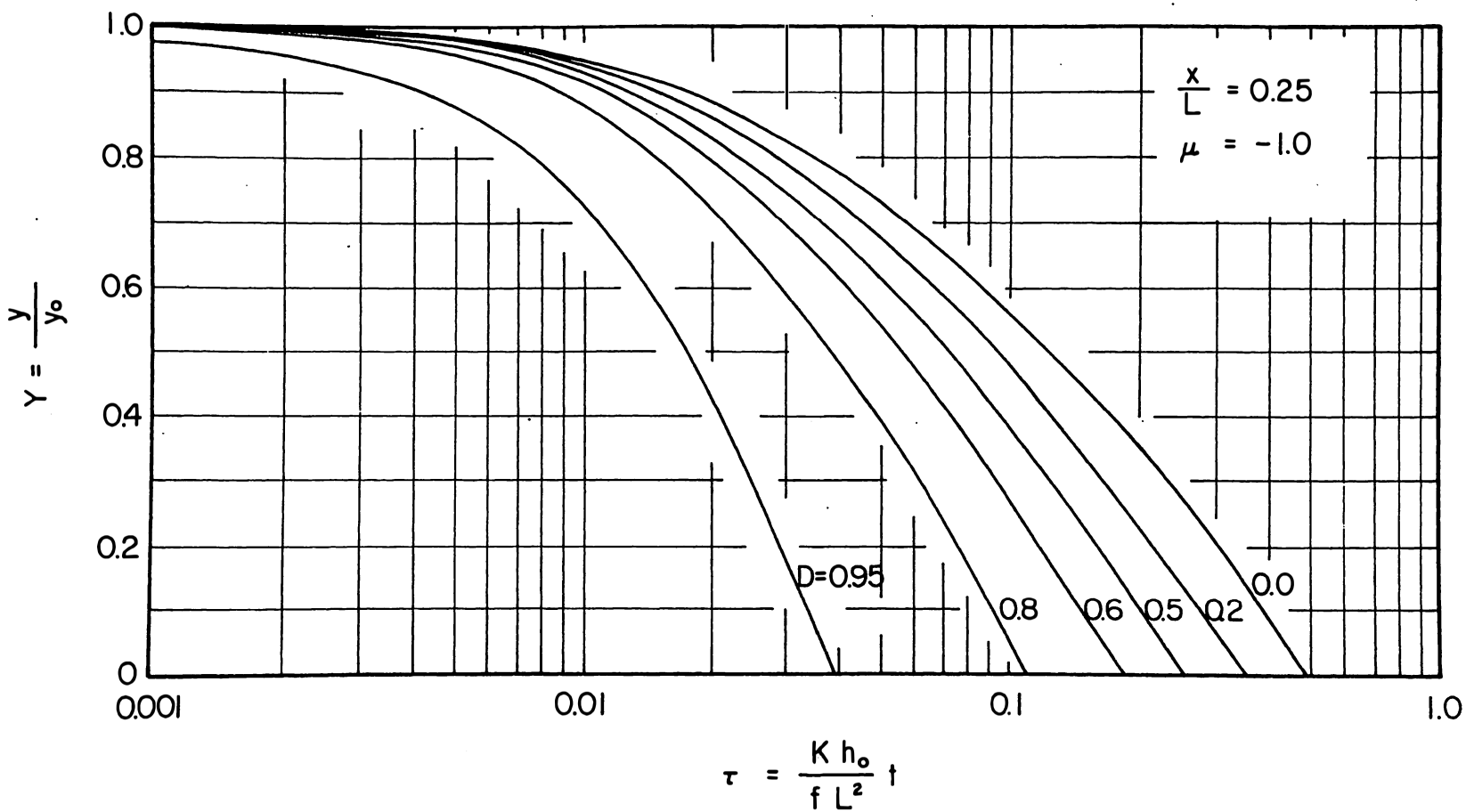
1.0
0.8
0.6
0.4
0.2
0
0.001
0.01
0.1
1.0
$Y = \frac{y}{y_o}$
$\tau = \frac{K h_o}{f L^2} t$
$\frac{x}{L} = 0.25$
$\mu = -1.0$
D=0.95
0.8
0.6
0.5
0.2
0.0

Figure 5.12

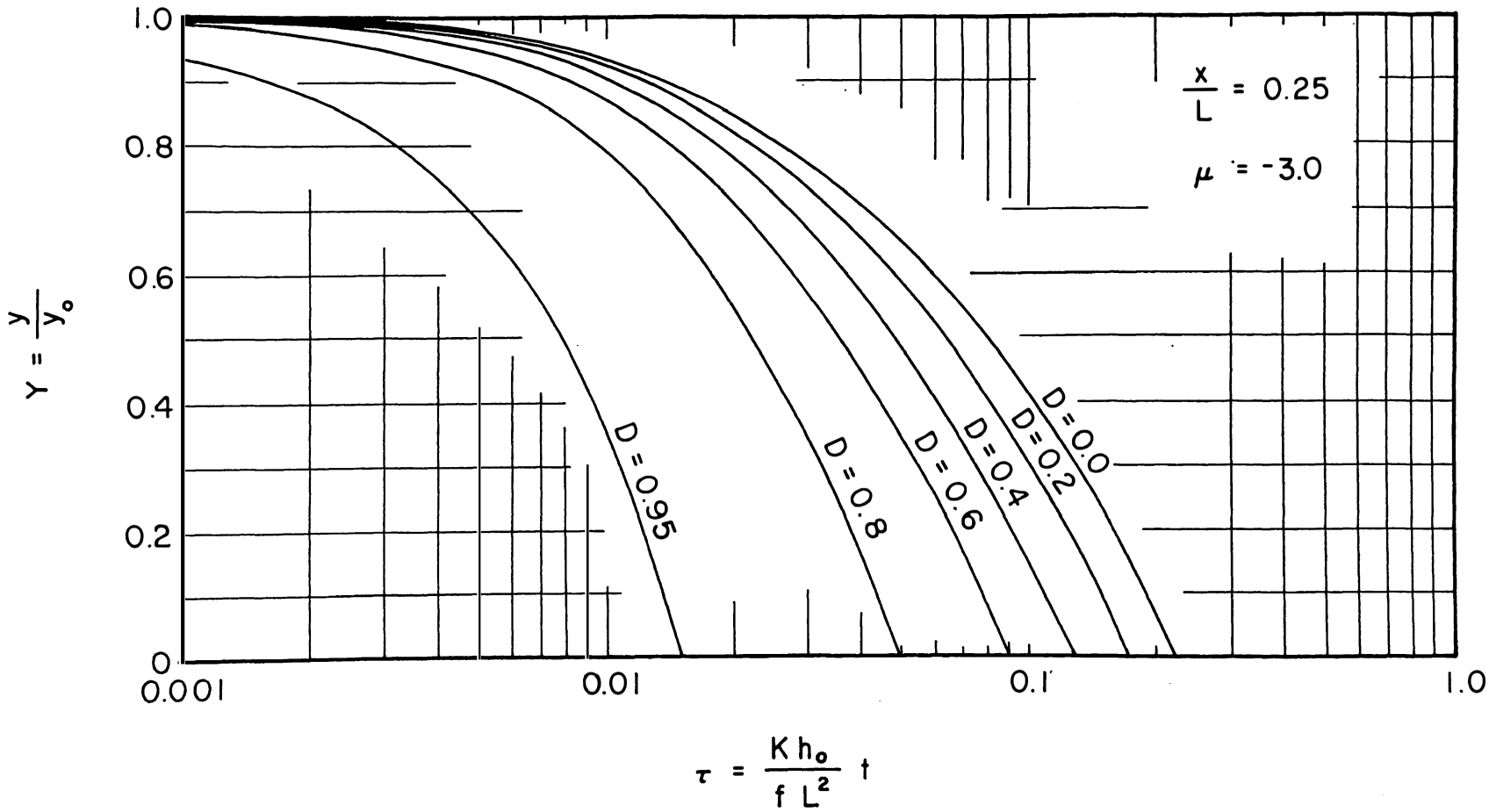
1.0
0.8
0.6
0.4
0.2
0
0.001
0.01
0.1
1.0
$Y = \frac{y}{y_o}$
$\tau = \frac{K h_o}{f L^2} t$
$\frac{x}{L} = 0.25$
$\mu = -3.0$
D = 0.0
D = 0.2
D = 0.4
D = 0.6
D = 0.8
D = 0.95

Figure 5.13

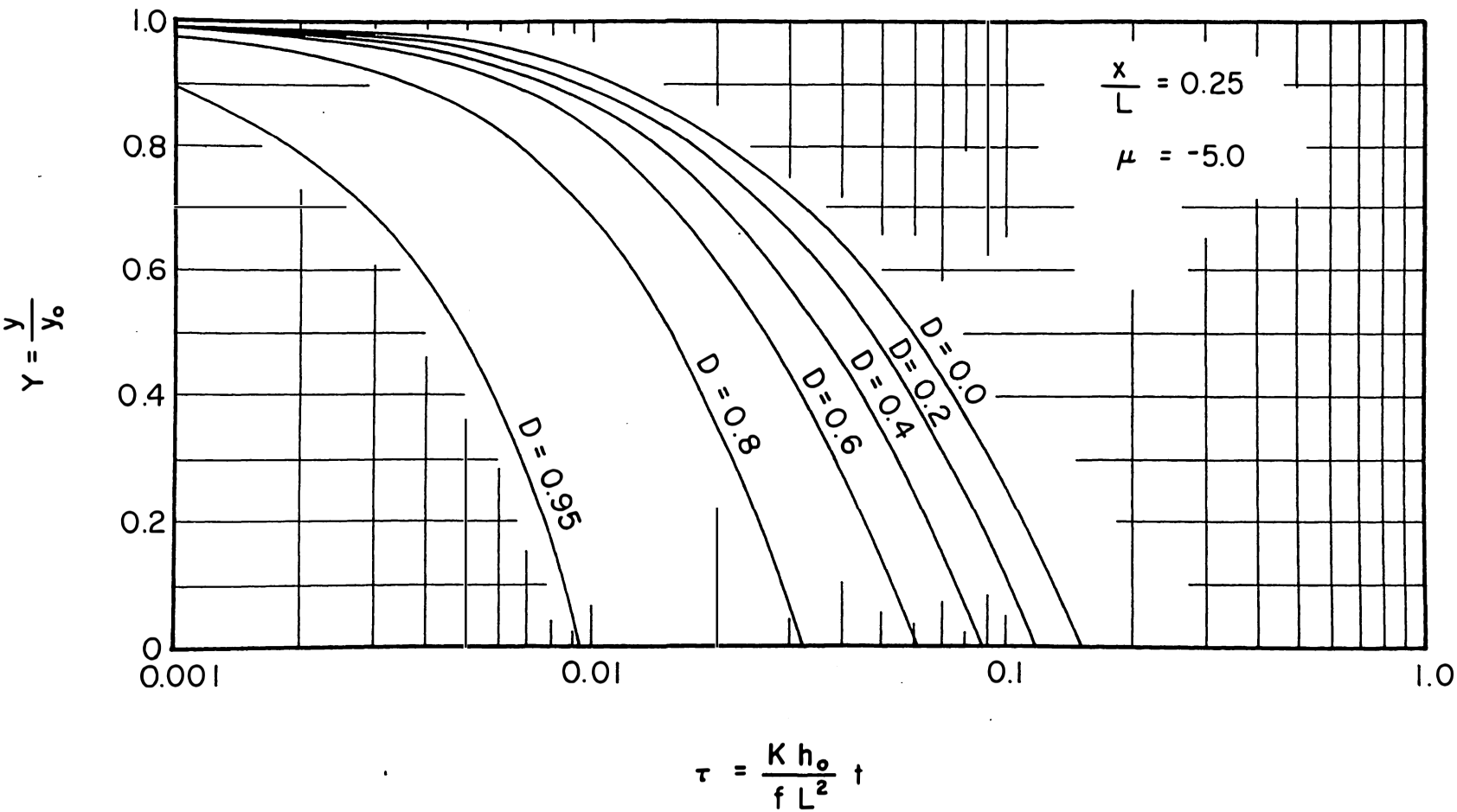
1.0
0.8
0.6
0.4
0.2
0
0.001
0.01
0.1
1.0
$\frac{x}{L} = 0.25$
$\mu = -5.0$
D = 0.0
D = 0.2
D = 0.4
D = 0.6
D = 0.8
D = 0.95
$Y = \frac{y}{y_o}$
$\tau = \frac{K h_o}{f L^2} t$

Figure 5.14

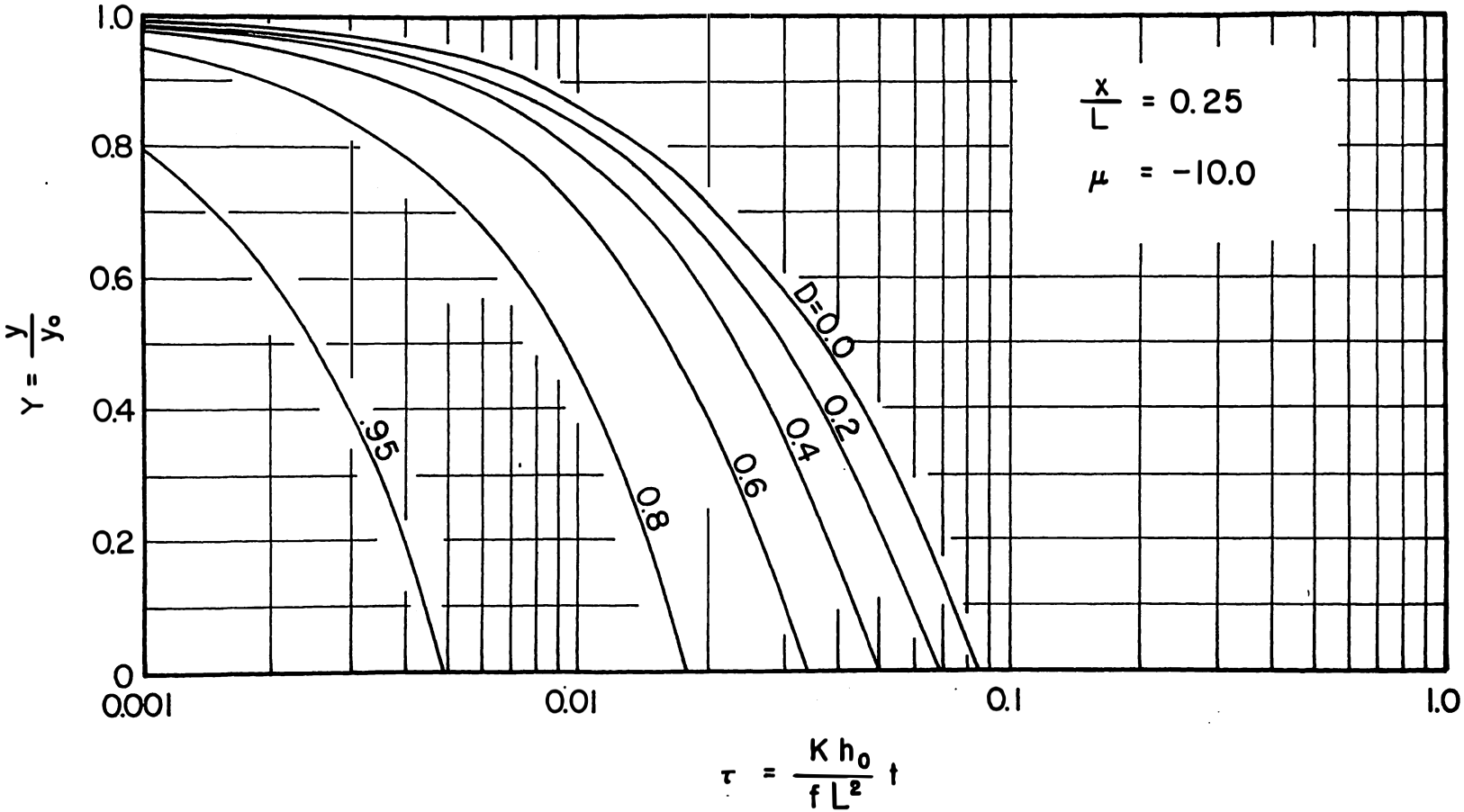
1.0
0.8
0.6
0.4
0.2
0
0.001
0.01
0.1
1.0
$Y = \frac{y}{y_0}$
$\tau = \frac{K h_0}{f L^2} t$
$\frac{x}{L} = 0.25$
$\mu = -10.0$
D=0.0
0.2
0.4
0.6
0.8
.95

Figure 5.15

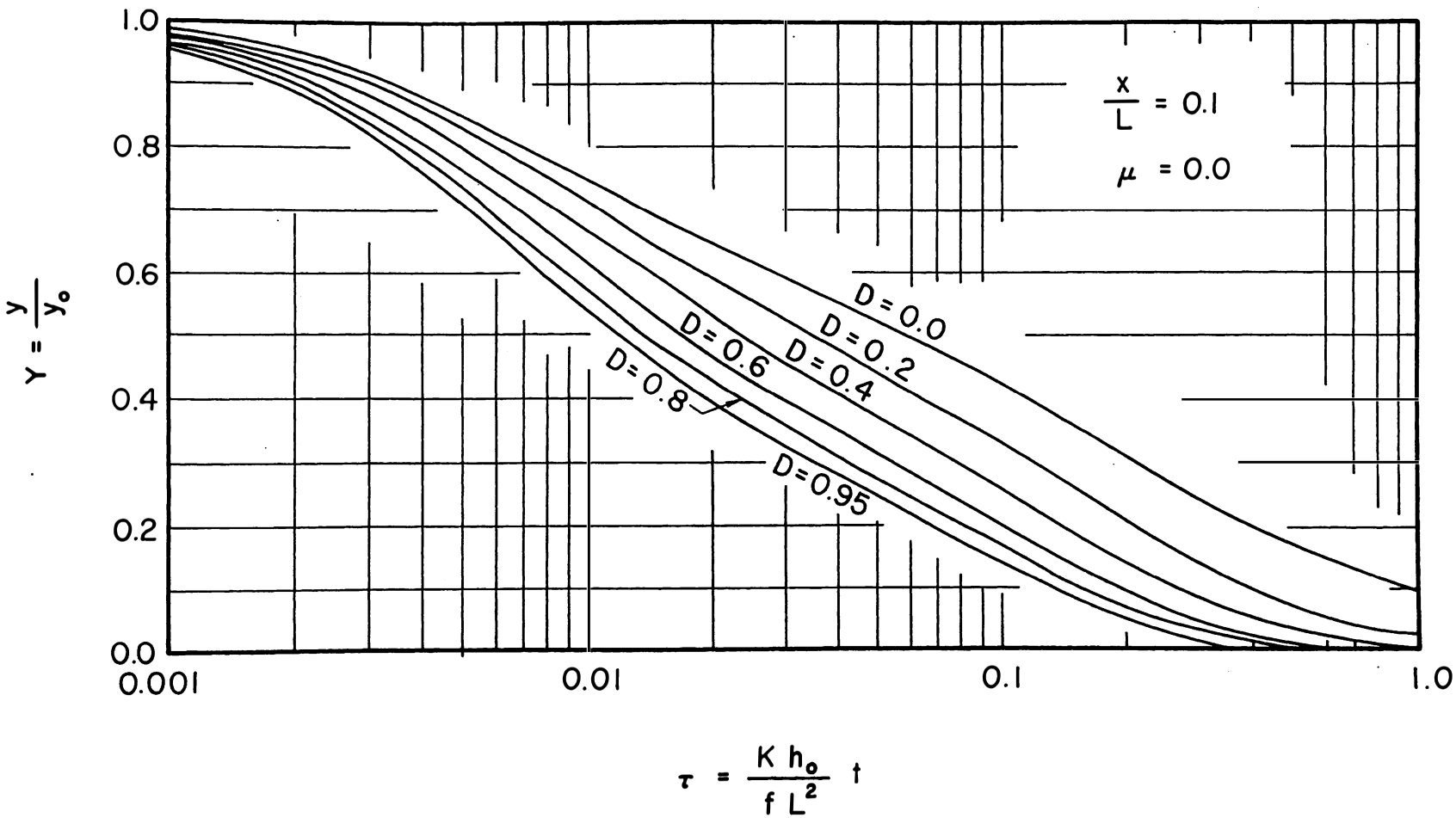
1.0
0.8
0.6
0.4
0.2
0.0
0.001
0.01
0.1
1.0
$Y = \frac{y}{y_o}$
$\frac{x}{L} = 0.1$
$\mu = 0.0$
D = 0.0
D = 0.2
D = 0.4
D = 0.6
D = 0.8
D = 0.95
$\tau = \frac{K h_o}{f L^2} t$

Figure 5.16

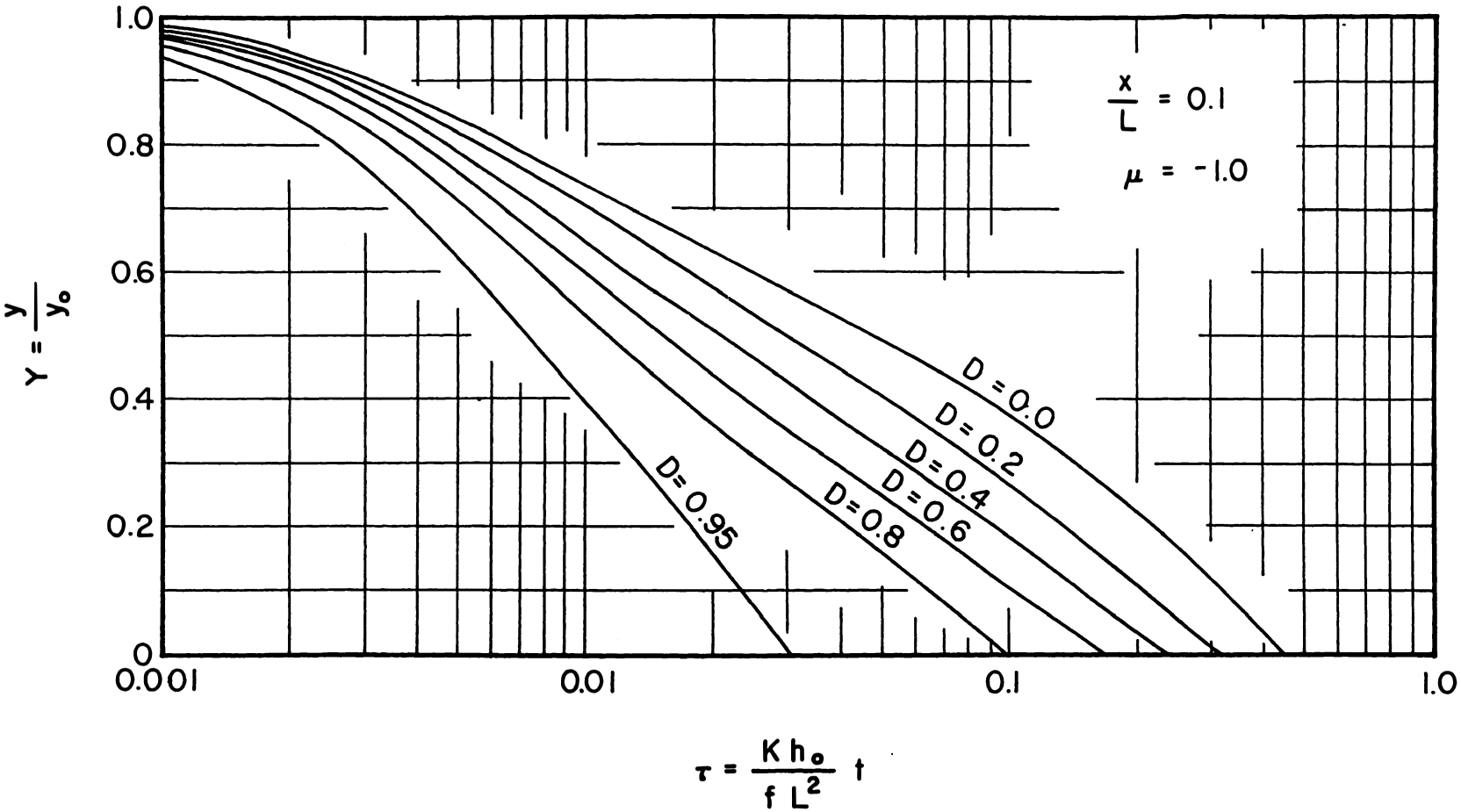
1.0
0.8
0.6
0.4
0.2
0
0.001
0.01
0.1
1.0
$Y = \frac{y}{y_o}$
$\tau = \frac{K h_o}{f L^2} t$
$\frac{x}{L} = 0.1$
$\mu = -1.0$
D = 0.0
D = 0.2
D = 0.4
D = 0.6
D = 0.8
D = 0.95

Figure 5.17

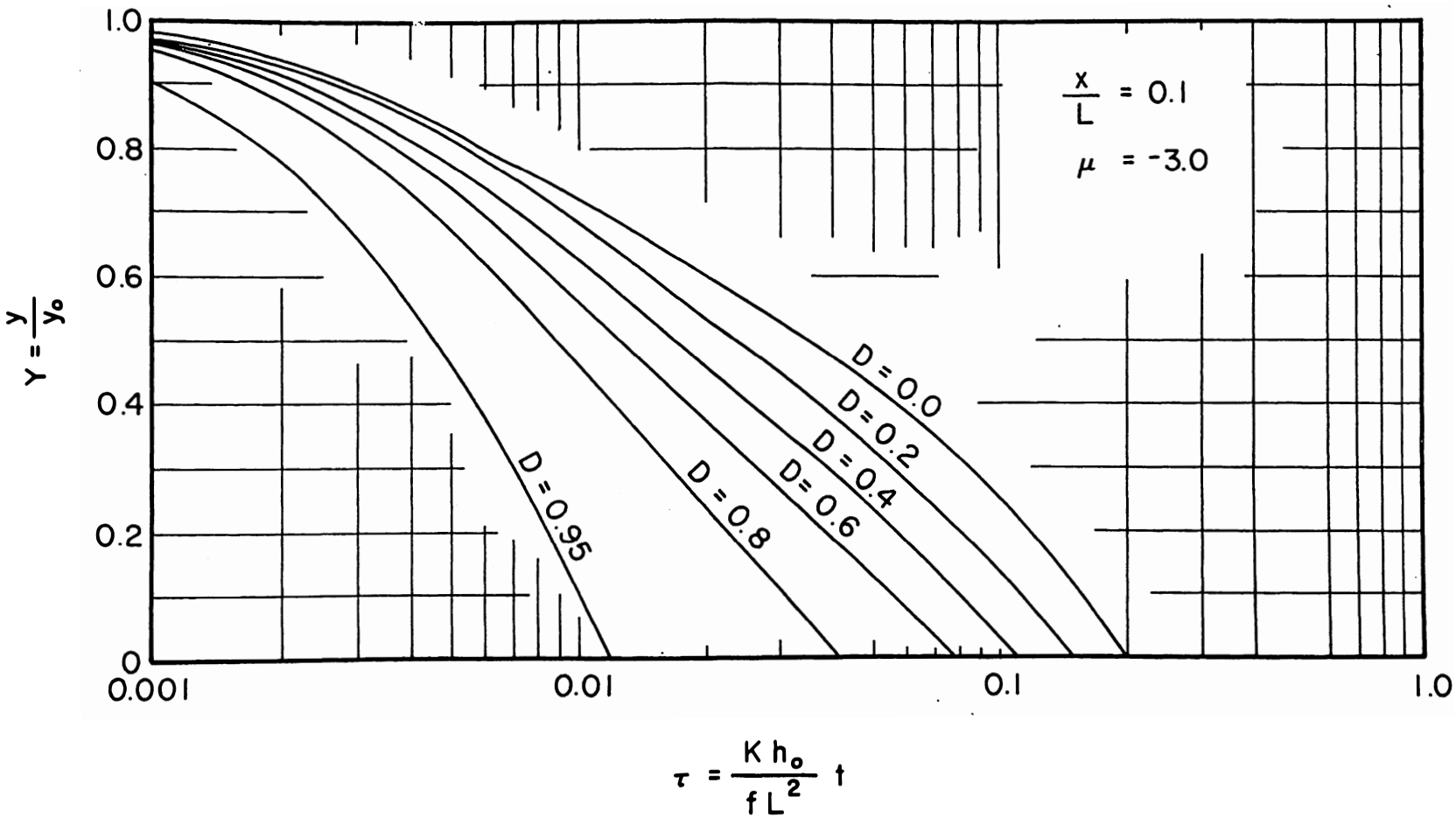
1.0
0.8
0.6
0.4
0.2
0
0.001
0.01
0.1
1.0
$Y = \frac{y}{y_o}$
$\tau = \frac{K h_o}{f L^2} t$
$\frac{x}{L} = 0.1$
$\mu = -3.0$
D = 0.0
D = 0.2
D = 0.4
D = 0.6
D = 0.8
D = 0.95

Figure 5.18

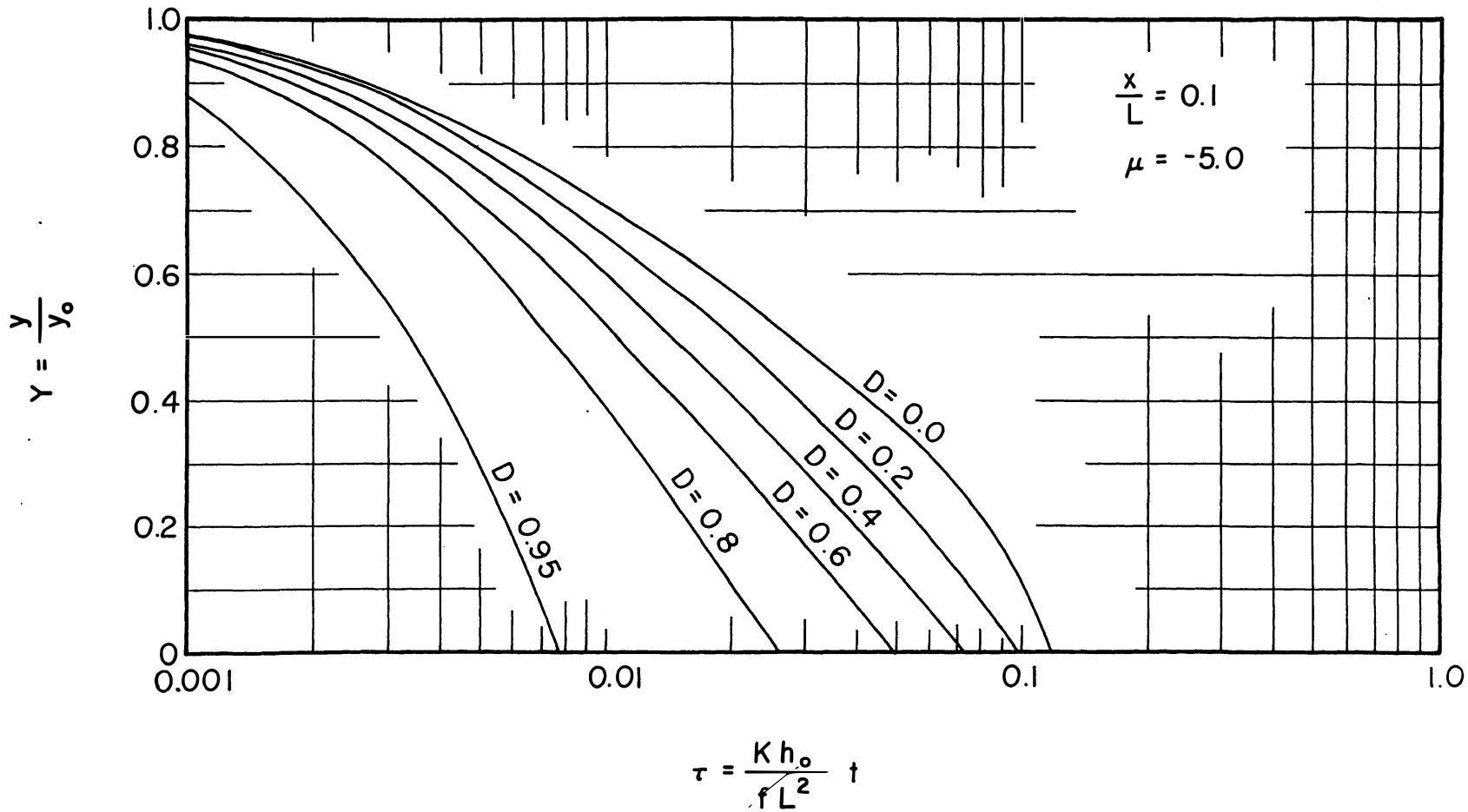
1.0
0.8
0.6
0.4
0.2
0
0.001
0.01
0.1
1.0
$Y = \frac{y}{y_o}$
$\tau = \frac{K h_o}{f L^2} t$
$\frac{x}{L} = 0.1$
$\mu = -5.0$
D = 0.0
D = 0.2
D = 0.4
D = 0.6
D = 0.8
D = 0.95

Figure 5.19

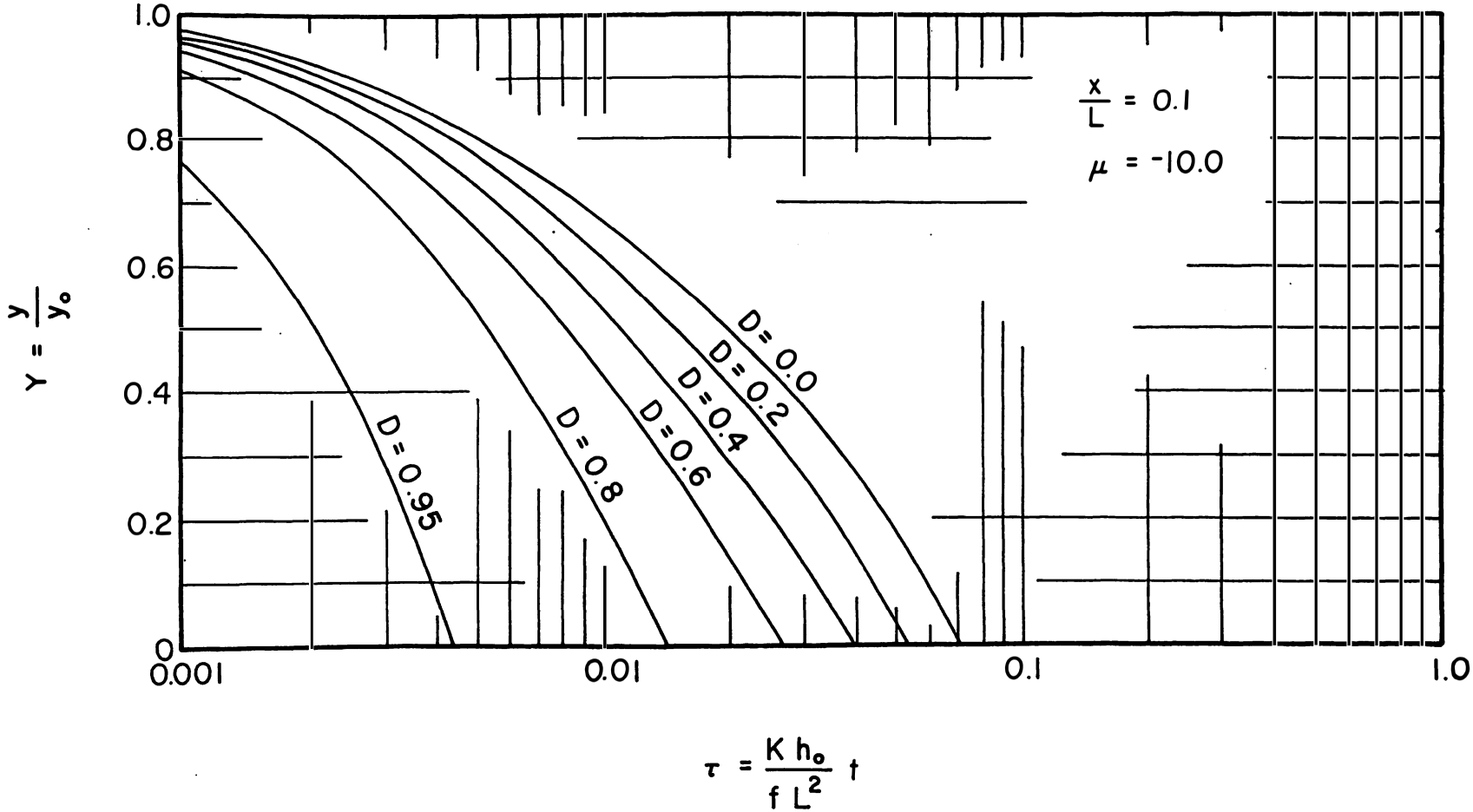
1.0
0.8
0.6
0.4
0.2
0
0.001
0.01
0.1
1.0
$Y = \frac{y}{y_o}$
$\tau = \frac{K h_o}{f L^2} t$
$\frac{x}{L} = 0.1$
$\mu = -10.0$
D = 0.0
D = 0.2
D = 0.4
D = 0.6
D = 0.8
D = 0.95

Figure 5.20

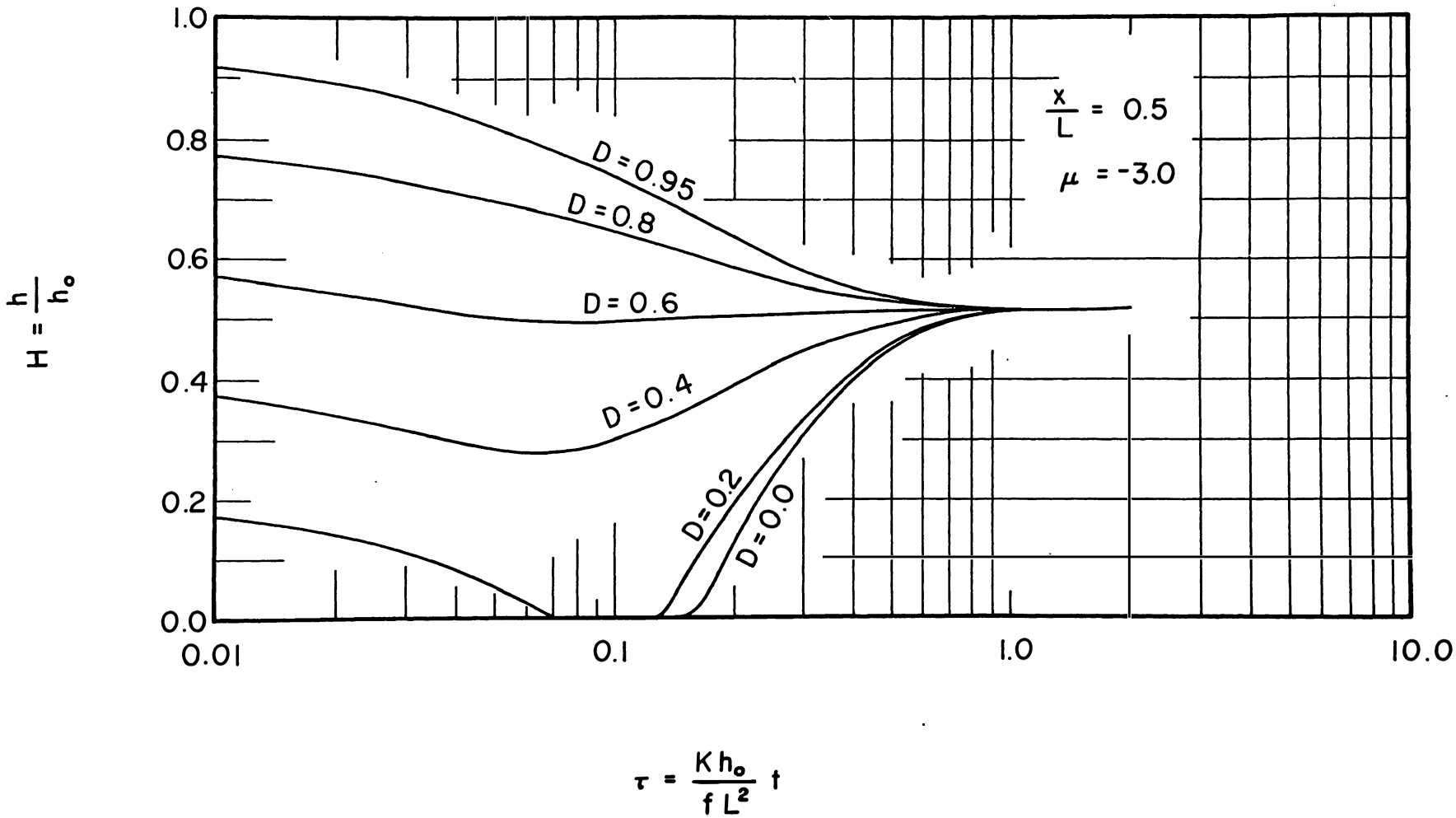
1.0
0.8
0.6
0.4
0.2
0.0
0.01
0.1
1.0
10.0
$H = \frac{h}{h_o}$
$\tau = \frac{K h_o}{f L^2} t$
$\frac{x}{L} = 0.5$
$\mu = -3.0$
D = 0.95
D = 0.8
D = 0.6
D = 0.4
D = 0.2
D = 0.0

Figure 5.21

5-1. A Wagram loamy sand has a saturated hydraulic conductivity of 6 cm/hr and drainable porosity of 0.1. The soil is 180 cm deep to an impermeable layer. Drains 6 inches in diameter are placed 100 cm below the surface and 30 m apart. Determine (a) the drawdown after 24 hours at a point midway between the drains; (b) the drainage rate at t = 0, 12, and 24 hours. Use the series solution to the linearized Boussinesq equation for this problem. Show the effect of using 1, 2, and 3 terms in the series solution on the answers to (a) and (b) above.

5-2. Starting with the Boussinesq equation,

and the boundary conditions for drainage to parallel drains with an initially horizontal profile, write the equation and boundary conditions in non-dimensional form.

What are the advantages for using a nondimensional form?

5-3. Linearize the nondimensional form of the Boussinesq equation and solve for a horizontal initi $f \frac{\partial h}{\partial t} = \frac{\partial}{\partial x} h \frac{\partial h}{\partial x} + R$ al water table using separation of variables for the case where R = 0.

5-4. The water table is initially horizontal at a distance d above the impermeable layer. At time zero the water level in the drains is raised a distance h_o above the impermeable layer. Determine the solution for this problem by separation of variables.

5-5. For the subirrigation problem of 5-4 and conditions given in 5-1 find the water table rise at x = 1 m and x = 15 m for t = 1, 12 and 24 hours. Determine the subirrigation rate for the same times, i.e. the outflow rate from the drains.

5-6. Solve 5-3 for R ≠ 0 by separation of variables.

5-7. Solve 5-4 for R ≠ 0 by separation of variables.

5-8. Lumbee sandy loam has K = 4 cm/hr. Drains are to be placed 4 ft. deep. How far apart should the drains be such that the water table will not be closer than 1 ft. from the surface if steady rainfall occurs at a rate of 7 mm/day? The drainable porosity f = .05 cm^3/cm^3. The impermeable layer is 6 ft. from the surface and the effective drain diameter is 2.5 cm.

5-9. For the drain spacing above, what will be the drawdown midway between drains

during the first 24 hrs. if the water table is initially at the surface?

5-10.

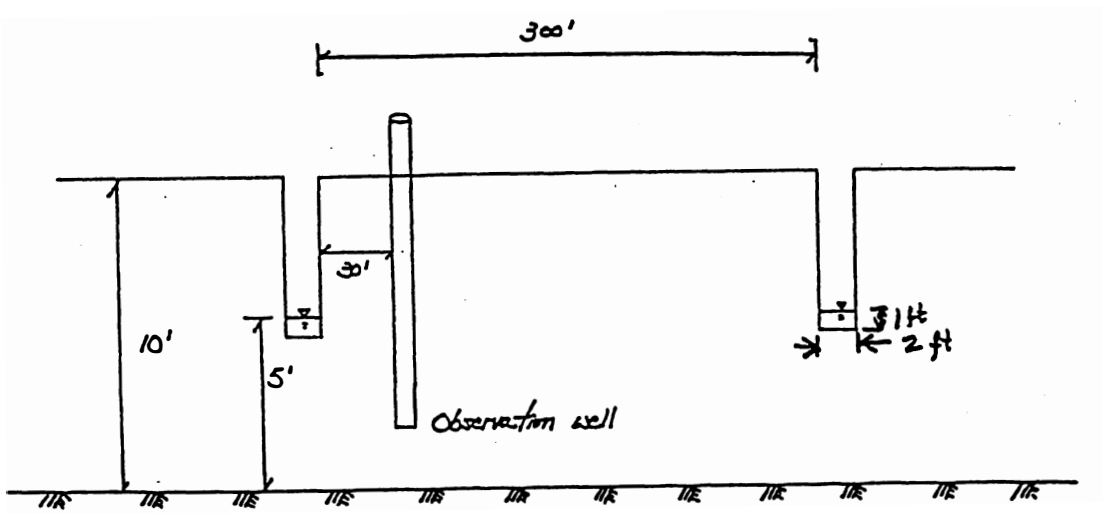

For the above situation the water table is initially at the surface (h = 10 ft., at t = 0, all x). Observation well records indicated the water table fell 1 ft. in 6 hours. What is K/f for this soil?

5-11. For the soil in problem 5-10, how far apart would the ditches need to be spaced to give a drawdown midway between of 8 in. in 36 hrs.?

5-12. 100,000 acres of G100-Gray soil are to be drained by plastic drain tubing. The soil is uniform with an impermeable layer at 15 ft. deep. Drawdown of 15 cm in 24 hours is measured in an observation well located 70 ft. from a single ditch 7.5 ft. deep. How far apart will 5 inch drain tubing r_e = 2 cm need to be placed to provide drawdown midway between drains of 9 inches during the first day? Assume the tubing is placed at a depth of 100 cm. **NOTE**: Consider convergence near the drains.

5-13. Find the spacing for problem 5-12 if the drains are placed at a 150 cm depth. At a 200 cm depth.

5-14. For the drain spacing found in problem 5-12, determine drawdown midway between the drains if the ET rate is 0.2 cm/day and f=0.04. Also for e = -0.6 cm/day. (Use numerical solutions)

5-15. A soil has K = 8 cm/hr and a drain spacing of 40 m. The following relationship between WTD and the volume drained was determined from the soil water characteristic.

WTD	V_d
0	0
10 cm	0.18
20	0.66
30	1.34
40	2.46
50	4.07
60	6.93
70	9.67
80	12.36
90	14.97
100	17.59

Depth to the impermeable layer is 2.5 m. The water table is initially at the surface. The drains are 4" standard with r_e = 1.5 cm placed at a 1.0 m depth. Plot the drawdown at the midpoint as a function of time. Assume f = 0.02 for WTD = 0.

5-16. Repeat problem 5-15 for a layered soil with K = 10 cm/hr for the top 100 cm and 4 cm/hr for the remainder of the profile.

5-17. Repeat problem 5-15 for a layered soil with the following K values:

layer depth	K
0 - 40 cm	20 cm/hr
40 - 120 cm	4 cm/hr
120 - 250 cm	10 cm/hr

5-18. Repeat problem 5-15 if there is evaporation from the surface at a rate of 0.3 cm/day for the first 48 hrs. and a rate of 0.6 cm/day thereafter.