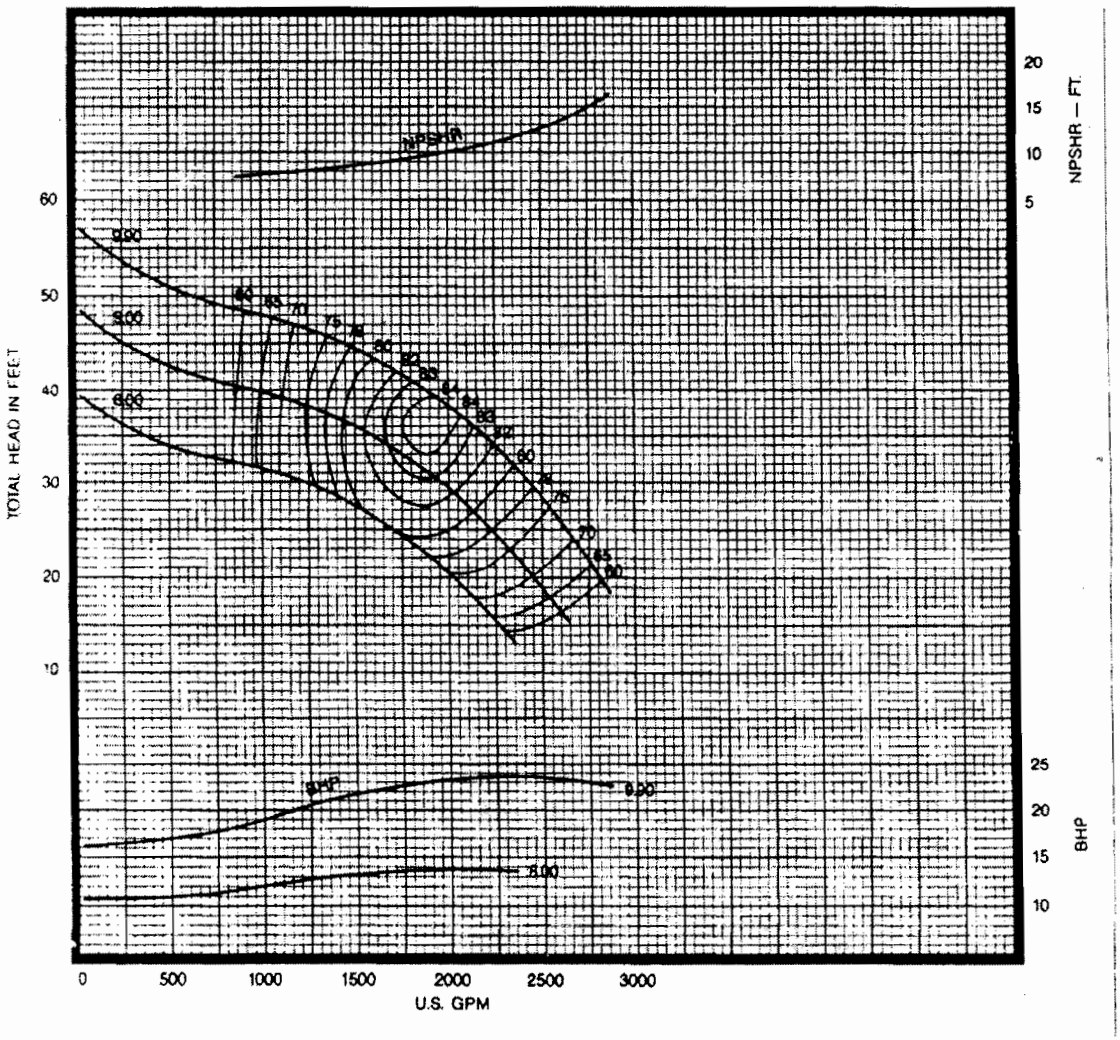

15H 7000

1170 RPM

ENCLOSED IMPELLER T7FKA99B

MULTI-STAGE

EFFICIENCY CORRECTIONS(1)

NUMBER OF STAGES	EFFICIENCY CHANGE
1	NA
2	-2.0 POINTS
3	-1.0 POINTS
4	NO CHANGE
5	NO CHANGE
6 OR MORE	NO CHANGE

BOWL MATERIAL	EFFICIENCY CHANGE
CAST IRON	-2.0 POINTS
ENAMELED C.I.	NO CHANGE

IMPELLER MATERIAL	EFFICIENCY CHANGE
CAST IRON	-1.0 POINTS
BRONZE	NO CHANGE
ENAMELED C.I.	+1.0 POINTS

(1) Refer to "Application and Reference Data" for head correction.

DIMENSIONS (Inches)

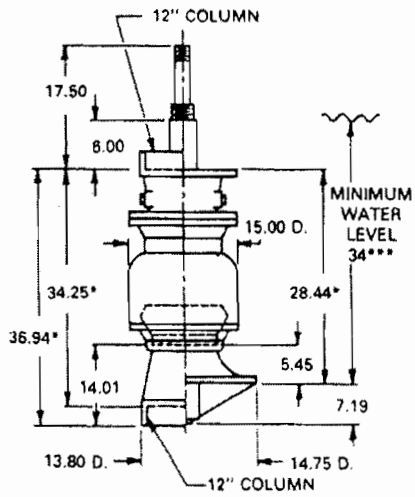

*Add 14.50 for each additional stage

TECHNICAL DATA

DATA	VALUE
MAXIMUM OPERATING SPEED	2100 RPM
MAXIMUM NUMBER OF STAGES	14**
PUMP SHAFT DIAMETER	1 3/16 IN.
IMPELLER EYE AREA	37.80 SQ. IN.
MAXIMUM SPHERE SIZE	1.31 IN.
K_1 (THRUST FACTOR)	14.47 LBS./FT.
K_2 (ROTOR WT. PER STAGE)	53.40 LBS.
BOWL WT. (FIRST STAGE)	469 LBS.
BOWL WT. (EACH ADD'L. STAGE)	200 LBS.
ALLOWABLE SHAFT STRETCH	.86 IN.**
WK^2 (FIRST STAGE)	4.91 LBS.-FT.^{2}
WK^2 (EACH ADD'L. STAGE)	4.69 LBS.-FT.^{2}
BOWL RING CLEARANCE	.014/.018 IN.

** These are nominal values. Refer to "Application and Reference Data" for information further limiting or extending these values.

*** This value is the minimum submergence required to prevent vortexing only. This value may need to be increased to provide adequate NPSHA.

15H 7000

1170 RPM

ENCLOSED IMPELLER T7FKA99B

1 STAGE

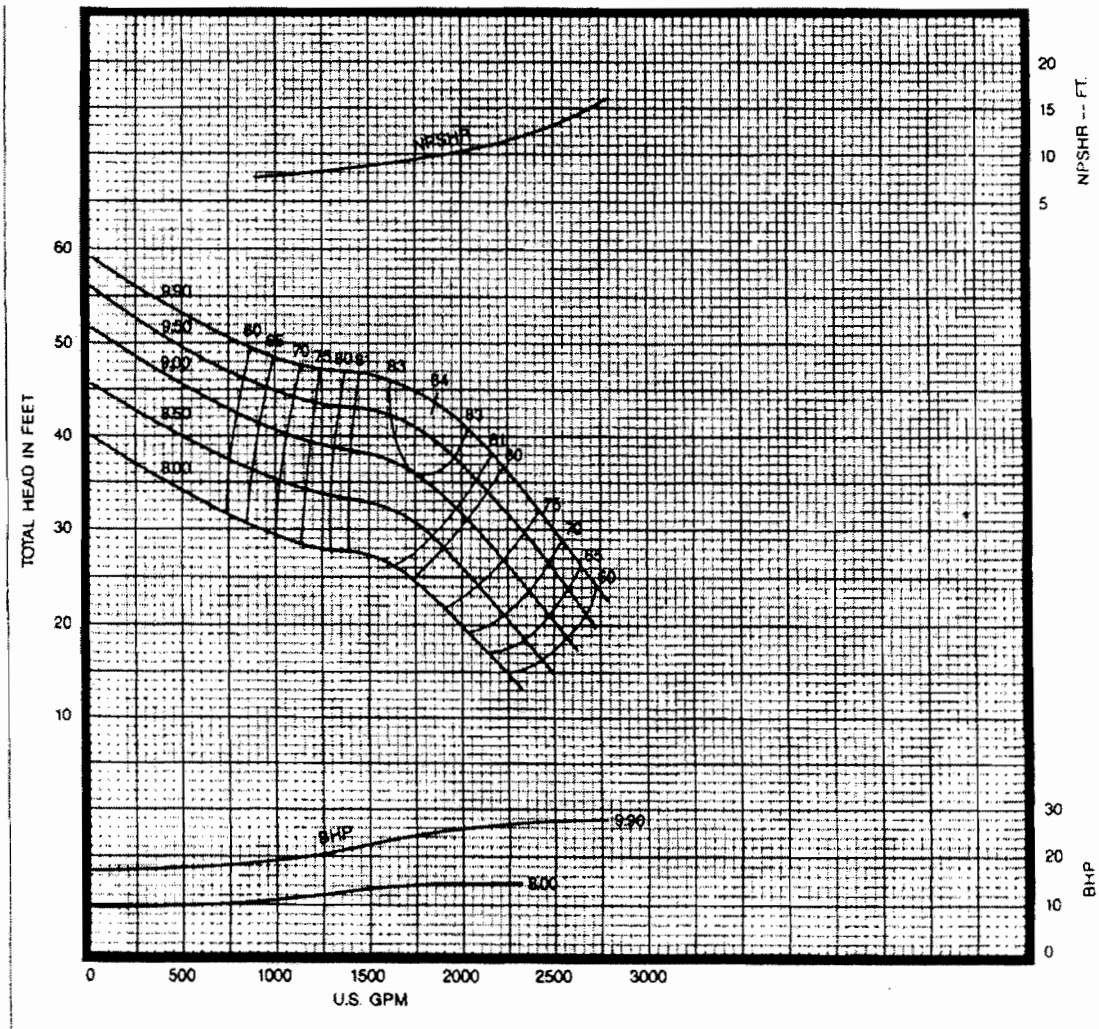

EFFICIENCY CORRECTIONS(1)

NUMBER OF STAGES	EFFICIENCY CHANGE
1	NO CHANGE
2	NA
3	NA
4	NA
5	NA
6 OR MORE	NA

BOWL MATERIAL	EFFICIENCY CHANGE
CAST IRON	-2.0 POINTS
ENAMELED C.I.	NO CHANGE

IMPELLER MATERIAL	EFFICIENCY CHANGE
CAST IRON	-1.0 POINTS
BRONZE	NO CHANGE
ENAMELED C.I.	+1.0 POINTS

(1) Refer to "Application and Reference Data" for head correction.

DIMENSIONS (Inches)

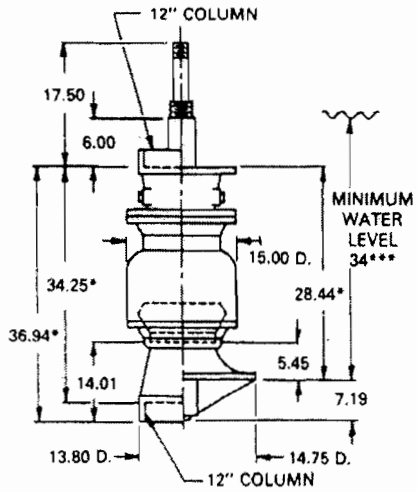

*Add 14.50 for each additional stage

TECHNICAL DATA

DATA	VALUE
MAXIMUM OPERATING SPEED	2100 RPM
MAXIMUM NUMBER OF STAGES	1
PUMP SHAFT DIAMETER	1 15/16 IN.
IMPELLER EYE AREA	37.80 SQ. IN
MAXIMUM SPHERE SIZE	1.31 IN
K_t (THRUST FACTOR)	14.47 LBS./FT.
K_s (ROTOR WT. PER STAGE)	53.40 LBS.
BOWL WT. (FIRST STAGE)	469 LBS.
BOWL WT. (EACH ADD'L. STAGE)	NA
ALLOWABLE SHAFT STRETCH	.86 IN **
WK^2 (FIRST STAGE)	4.91 LBS.-FT.^{2}
WK^2 (EACH ADD'L. STAGE)	NA
BOWL RING CLEARANCE	.014/.018 IN.

** These are nominal values. Refer to "Application and Reference Data" for information further limiting or extending these values.

*** This value is the minimum submergence required to prevent vortexing only. This value may need to be increased to provide adequate NPSHA.