VERTICAL TURBINE PUMPS
SINGLE STAGE PERFORMANCE

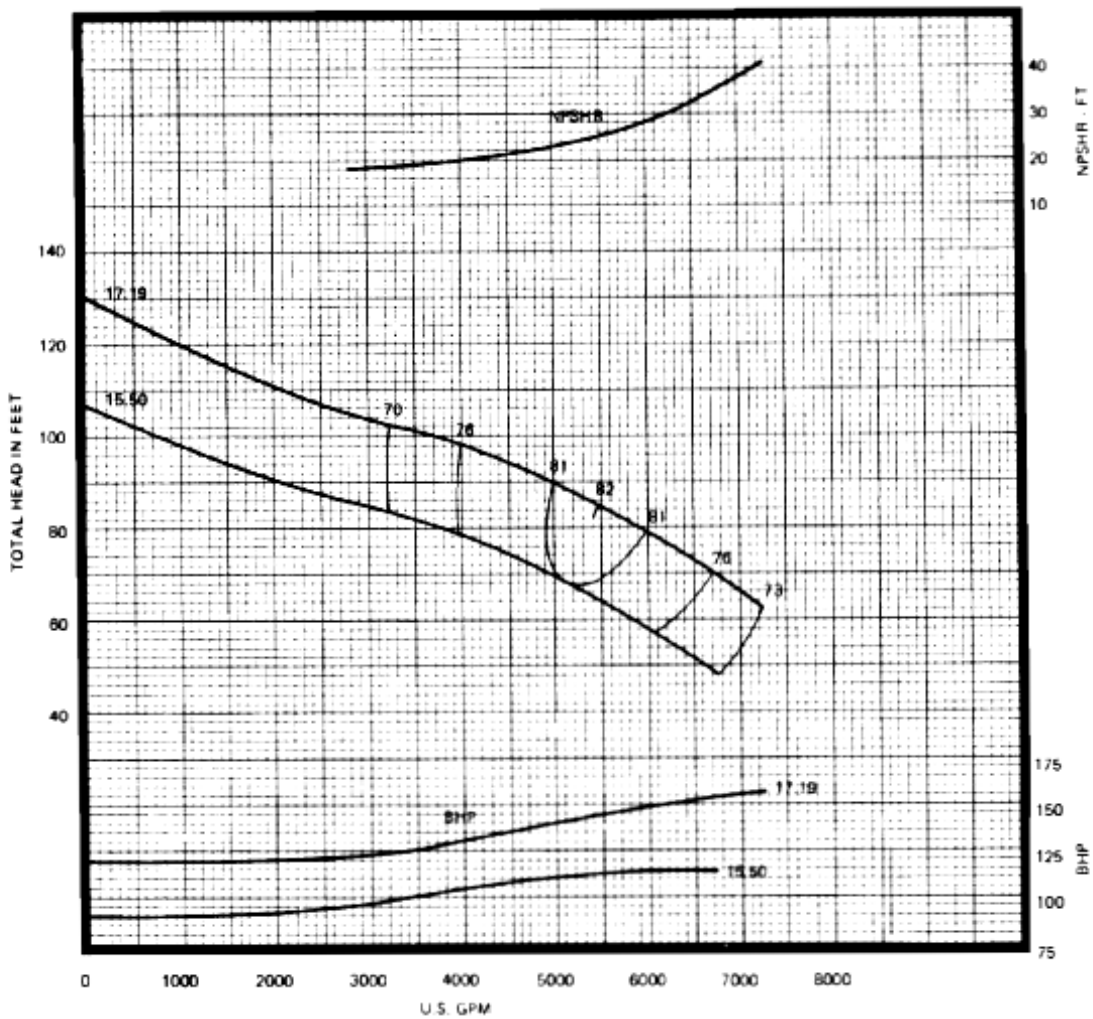

24H
6920

1170 RPM

IMPELLER
T5MA99

EFFICIENCY CORRECTIONS (1)

NUMBER OF STAGES	EFFICIENCY CHANGE
1	- 1.0 POINTS
2	NO CHANGE
3	NO CHANGE
4	NO CHANGE
5	NO CHANGE
6 OR MORE	NO CHANGE

BOWL MATERIAL	EFFICIENCY CHANGE
CAST IRON	- 1.0 POINTS
EPOXIED C. I.	NO CHANGE

IMPELLER MATERIAL	EFFICIENCY CHANGE
CAST IRON	- 1.0 POINTS
BRONZE	NO CHANGE
EPOXIED C. I.	NO CHANGE

(1) Refer to "Application and Reference Data" for head correction.

DIMENSIONS
(Inches)

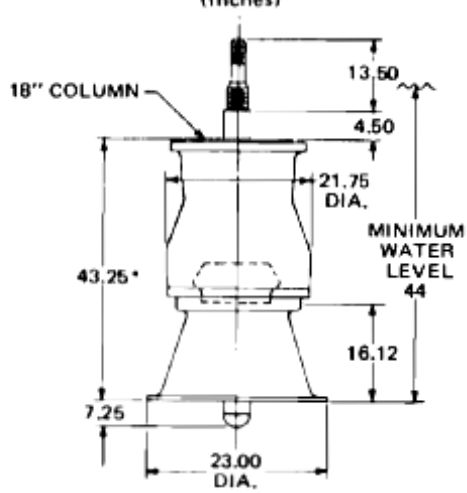

*Add 18.00 for each additional stage.

TECHNICAL DATA

DATA	VALUE
MAXIMUM OPERATING SPEED	1500 RPM
MAXIMUM NUMBER OF STAGES	10**
PUMP SHAFT DIAMETER	4 IN.
IMPELLER EYE AREA	91.3 SQ. IN.
MAXIMUM SPHERE SIZE	1.38 IN.
K_t (THRUST FACTOR)	39 LBS./FT.
K_a (ROTOR WT. PER STAGE)	126 LBS.
BOWL WT. (FIRST STAGE)	1600 LBS.
BOWL WT. (EACH ADD'L. STAGE)	800 LBS.
ALLOWABLE SHAFT STRETCH	1.06 IN.**
WK^2 (FIRST STAGE)	34.27 LBS.-FT.^{2}
WK^2 (EACH ADD'L. STAGE)	31.76 LBS.-FT.^{2}
BOWL RING CLEARANCE	.017/.022 IN.

**These are nominal values. Refer to "Application and Reference Data" for information further limiting or extending these values.