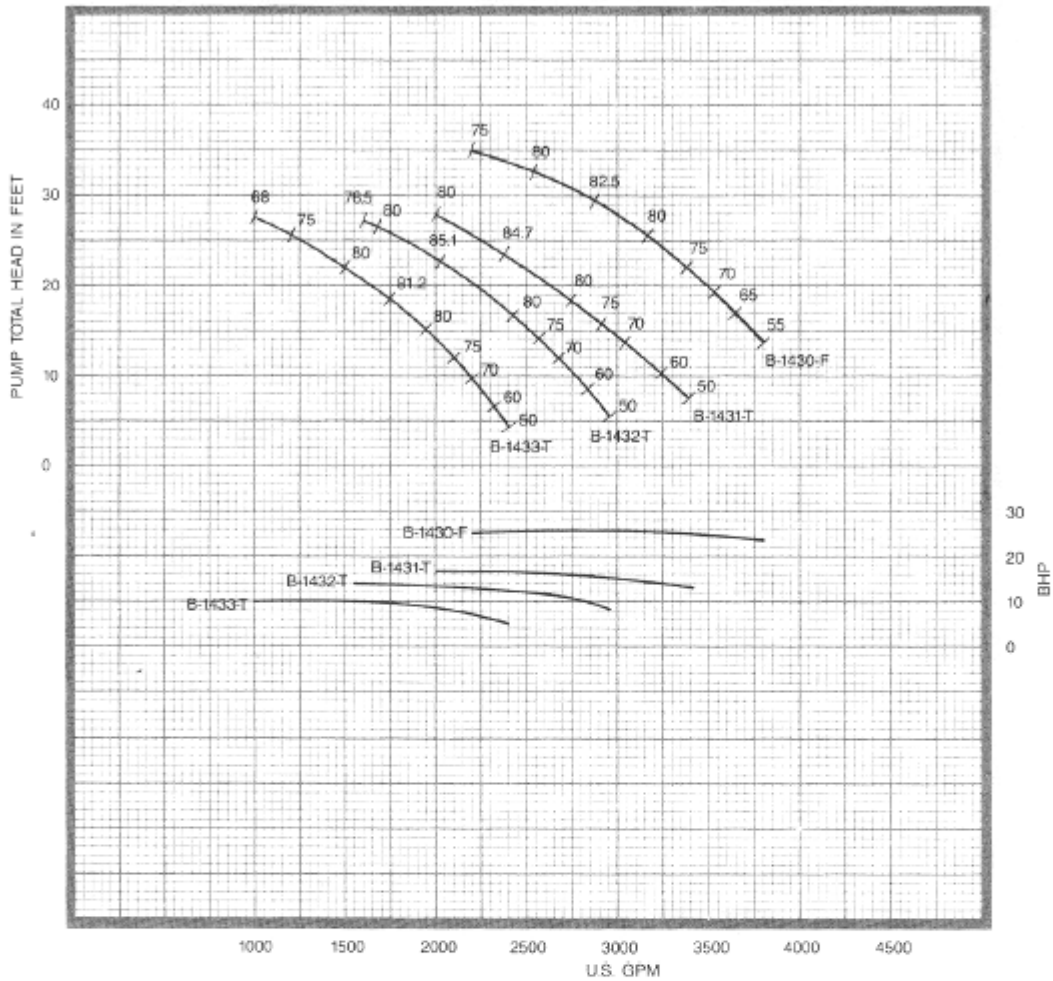

10″ 8312

1770 RPM

1 STAGE

10″ COLUMN

10″ CAST IRON ELBOW

1″ LINESHAFT

1-1/2″ ENCLOSING TUBE

DATA	VALUE	
PUMP SHAFT DIAMETER	1.1875 IN.	
MAXIMUM SPHERE SIZE	1.5 IN.	
K_t (THRUST FACTOR)	20 LBS./FT.	
K_a (TOTAL ROTOR WEIGHT)	17 LBS.	
K_s (SETTING CONSTANT)	2.8 LBS./FT.	
WK^2	1.1 LBS.-FT.^{2}	
BOWL ASSEMBLY WEIGHT	265 LBS.	
EYE AREA: PROPELLER NO. B-1430-F	41.0 SQ. IN.	4 VANE
PROPELLER NO. B-1431-T	41.0 SQ. IN.	3 VANE
PROPELLER NO. B-1432-T	41.0 SQ. IN.	3 VANE
PROPELLER NO. B-1433-T	41.0 SQ. IN.	3 VANE
PROPELLER NO.		
PROPELLER NO.		

HYDRAULIC PERFORMANCE IS CONTINGENT ON FURNISHING THE PUMP WITH SPECIFIED AMOUNT OF CLEAR, FRESH, NON-AERATED WATER NOT TO EXCEED 85° F.

PUMP PERFORMANCE SHOWN IS BOWL ASSEMBLY WITH 10 FEET OF COLUMN INCLUDING A STANDARD ABOVE GROUND DISCHARGE ELBOW. ADDITIONAL COLUMN LOSSES SHOULD BE ADDED WHEN SETTINGS ARE DEEPER THAN 10 FEET AND/OR FOR OTHER DISCHARGE ARRANGEMENTS.

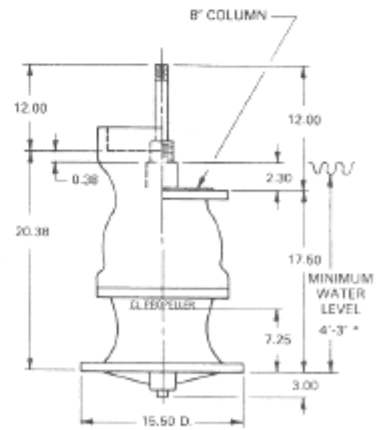

*This value is the minimum submergence required to prevent vortexing only. This value may need to be increased to provide adequate NPSHA.

10″ 8312

1770 RPM

2 STAGE

10″ COLUMN

10″ CAST IRON ELBOW

1-1/4″ LINESHAFT

2″ ENCLOSING TUBE

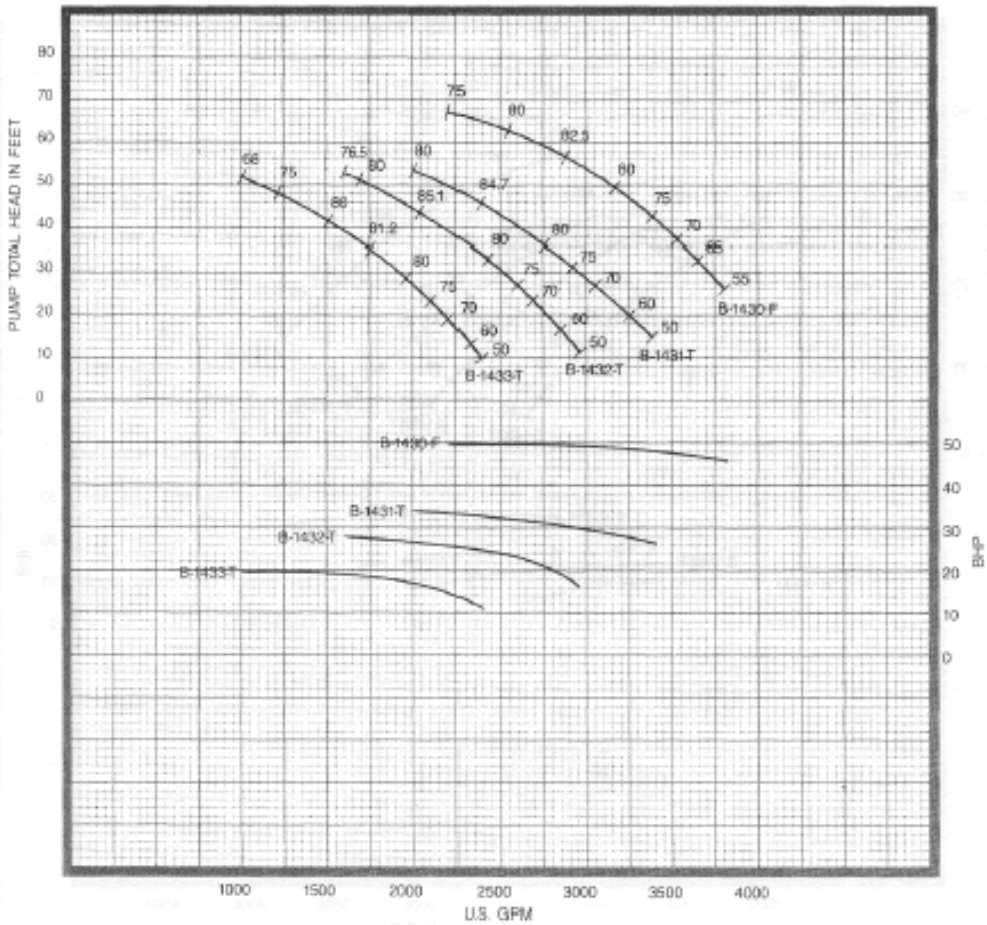

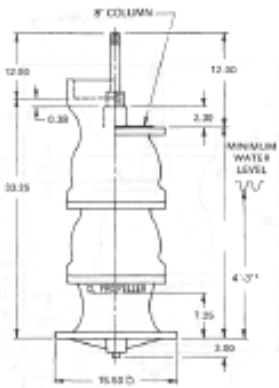

*This value is the minimum submergence required to prevent vortexing only. This value may need to be increased to provide adequate NPSHA.

DATA		VALUE	
PUMP SHAFT DIAMETER		1.1875 IN.	
MAXIMUM SPHERE SIZE		1.5 IN.	
K_t (THRUST FACTOR)		20 LBS./FT.	
K_a (TOTAL ROTOR WEIGHT)		34 LBS.	
K_s (SETTING CONSTANT)		3.8 LBS./FT.	
WK^2		2.2 LBS.-FT.^{2}	
BOWL ASSEMBLY WEIGHT		385 LBS.	
EYE AREA:	PROPELLER NO. B-1430-F	41.0 SQ. IN.	4 VANE
	PROPELLER NO. B-1431-T	41.0 SQ. IN.	3 VANE
	PROPELLER NO. B-1432-T	41.0 SQ. IN.	3 VANE
	PROPELLER NO. B-1433-T	41.0 SQ. IN.	3 VANE
	PROPELLER NO.		
	PROPELLER NO.		

HYDRAULIC PERFORMANCE IS CONTINGENT ON FURNISHING THE PUMP WITH SPECIFIED AMOUNT OF CLEAR, FRESH, NON-AERATED WATER NOT TO EXCEED 85° F.

PUMP PERFORMANCE SHOWN IS BOWL ASSEMBLY WITH 10 FEET OF COLUMN INCLUDING A STANDARD ABOVE GROUND DISCHARGE ELBOW. ADDITIONAL COLUMN LOSSES SHOULD BE ADDED WHEN SETTINGS ARE DEEPER THAN 10 FEET AND/OR FOR OTHER DISCHARGE ARRANGEMENTS.

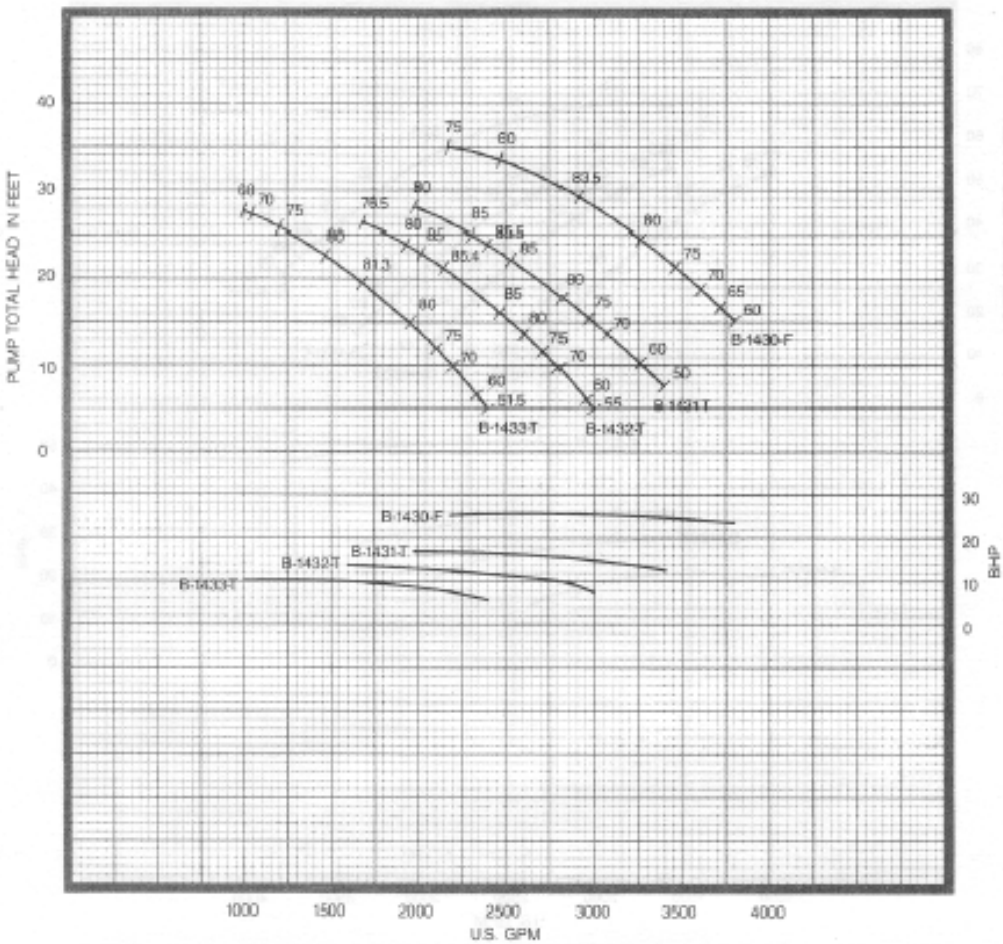

10″
8312

1770 RPM

1 STAGE

12″ COLUMN

12″ CAST IRON ELBOW

1″ LINESHAFT

1-1/2″ ENCLOSING TUBE

DATA	VALUE	
PUMP SHAFT DIAMETER	1.1875 IN.	
MAXIMUM SPHERE SIZE	1.5 IN.	
K_t (THRUST FACTOR)	20 LBS./FT.	
K_a (TOTAL ROTOR WEIGHT)	17 LBS.	
K_s (SETTING CONSTANT)	2.8 LBS./FT.	
WK^2	1.1 LBS.-FT.^{2}	
BOWL ASSEMBLY WEIGHT	325 LBS.	
EYE AREA: PROPELLER NO. B-1430-F	41.0 SQ. IN.	4 VANE
PROPELLER NO. B-1431-T	41.0 SQ. IN.	3 VANE
PROPELLER NO. B-1432-T	41.0 SQ. IN.	3 VANE
PROPELLER NO. B-1433-T	41.0 SQ. IN.	3 VANE
PROPELLER NO.		
PROPELLER NO.		

HYDRAULIC PERFORMANCE IS CONTINGENT ON FURNISHING THE PUMP WITH SPECIFIED AMOUNT OF CLEAR, FRESH, NON-AERATED WATER NOT TO EXCEED 85° F.

PUMP PERFORMANCE SHOWN IS BOWL ASSEMBLY WITH 10 FEET OF COLUMN INCLUDING A STANDARD ABOVE GROUND DISCHARGE ELBOW. ADDITIONAL COLUMN LOSSES SHOULD BE ADDED WHEN SETTINGS ARE DEEPER THAN 10 FEET AND/OR FOR OTHER DISCHARGE ARRANGEMENTS.

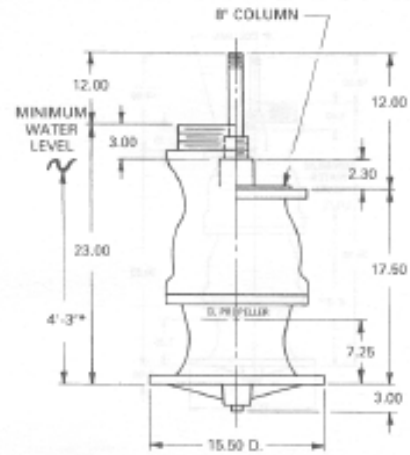

*This value is the minimum submergence required to prevent vortexing only. This value may need to be increased to provide adequate NPSHA.

10″ 8312

1770 RPM

2 STAGE

12″ COLUMN

12″ CAST IRON ELBOW

1-1/4″ LINESHAFT

2″ ENCLOSING TUBE

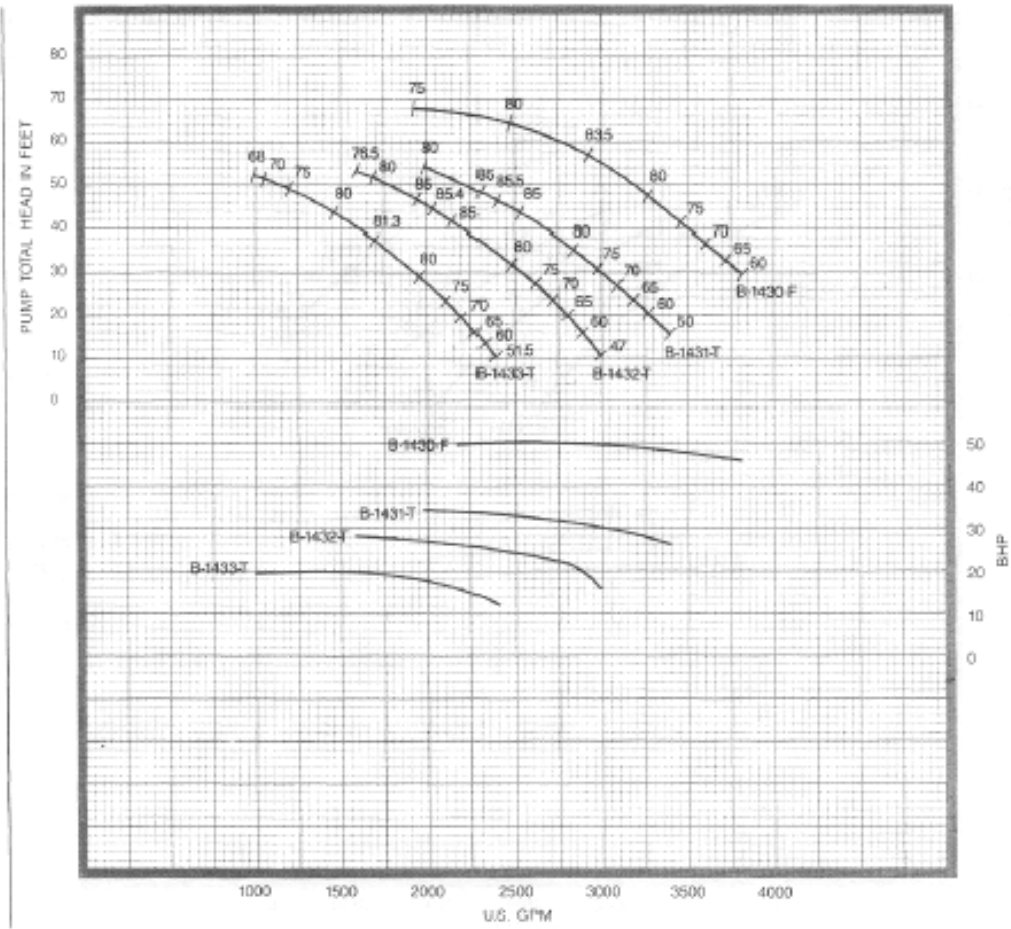

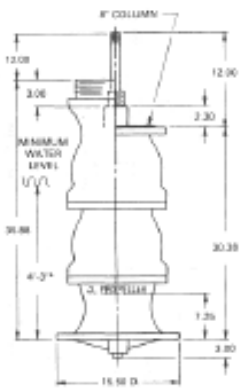

DATA	VALUE	
PUMP SHAFT DIAMETER	1.1875 IN.	
MAXIMUM SPHERE SIZE	1.5 IN.	
Kt (THRUST FACTOR)	20 LBS./FT.	
Ka (TOTAL ROTOR WEIGHT)	34 LBS.	
Ks (SETTING CONSTANT)	3.8 LBS./FT.	
WK²	2.2 LBS.-FT.²	
BOWL ASSEMBLY WEIGHT	445 LBS.	
EYE AREA: PROPELLER NO. B-1430-F	41.0 SQ. IN.	4 VANE
PROPELLER NO. B-1431-T	41.0 SQ. IN.	3 VANE
PROPELLER NO. B-1432-T	41.0 SQ. IN.	3 VANE
PROPELLER NO. B-1433-T	41.0 SQ. IN.	3 VANE
PROPELLER NO.		
PROPELLER NO.		

*This value is the minimum submergence required to prevent vortexing only. This value may need to be increased to provide adequate NPSHA.

HYDRAULIC PERFORMANCE IS CONTINGENT ON FURNISHING THE PUMP WITH SPECIFIED AMOUNT OF CLEAR, FRESH, NON-AERATED WATER NOT TO EXCEED 85° F.

PUMP PERFORMANCE SHOWN IS BOWL ASSEMBLY WITH 10 FEET OF COLUMN INCLUDING A STANDARD ABOVE GROUND DISCHARGE ELBOW. ADDITIONAL COLUMN LOSSES SHOULD BE ADDED WHEN SETTINGS ARE DEEPER THAN 10 FEET AND/OR FOR OTHER DISCHARGE ARRANGEMENTS.