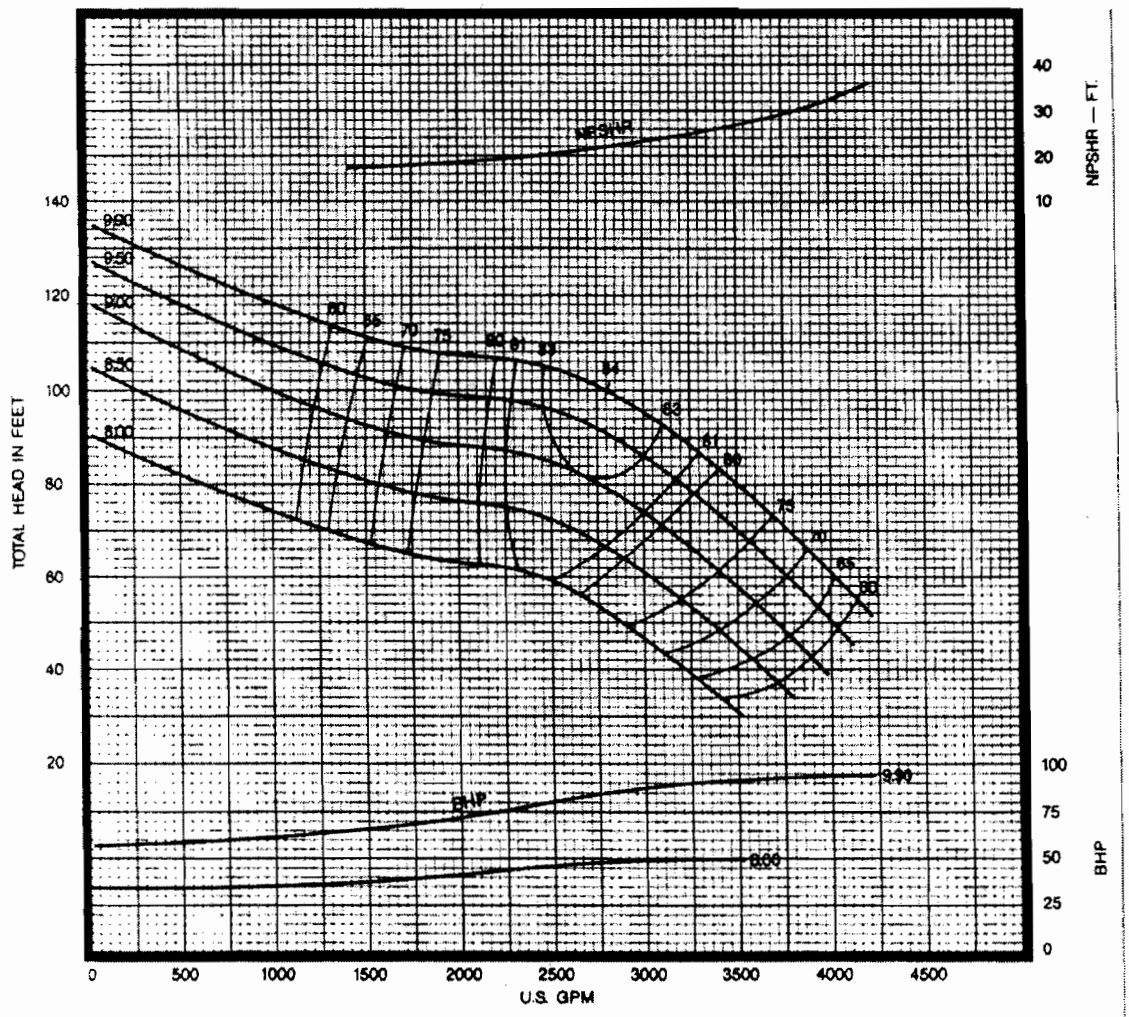
TOTAL HEAD IN FEET
140
120
100
80
60
40
20
0
500
1000
1500
2000
2500
3000
3500
4000
4500
U.S. GPM
NPSHR
NPSHR — FT.
40
30
20
10
BHP
100
75
50
25
0
9.90
8.00
80
85
90
95
100
105
110
115
120
125
130
135
140
145
150
155
160
165
170
175
180
185
190
195
200
205
210
215
220
225
230
235
240
245
250
255
260
265
270
275

15H 7000

1770 RPM

ENCLOSED IMPELLER T7FKA99B

MULTI-STAGE

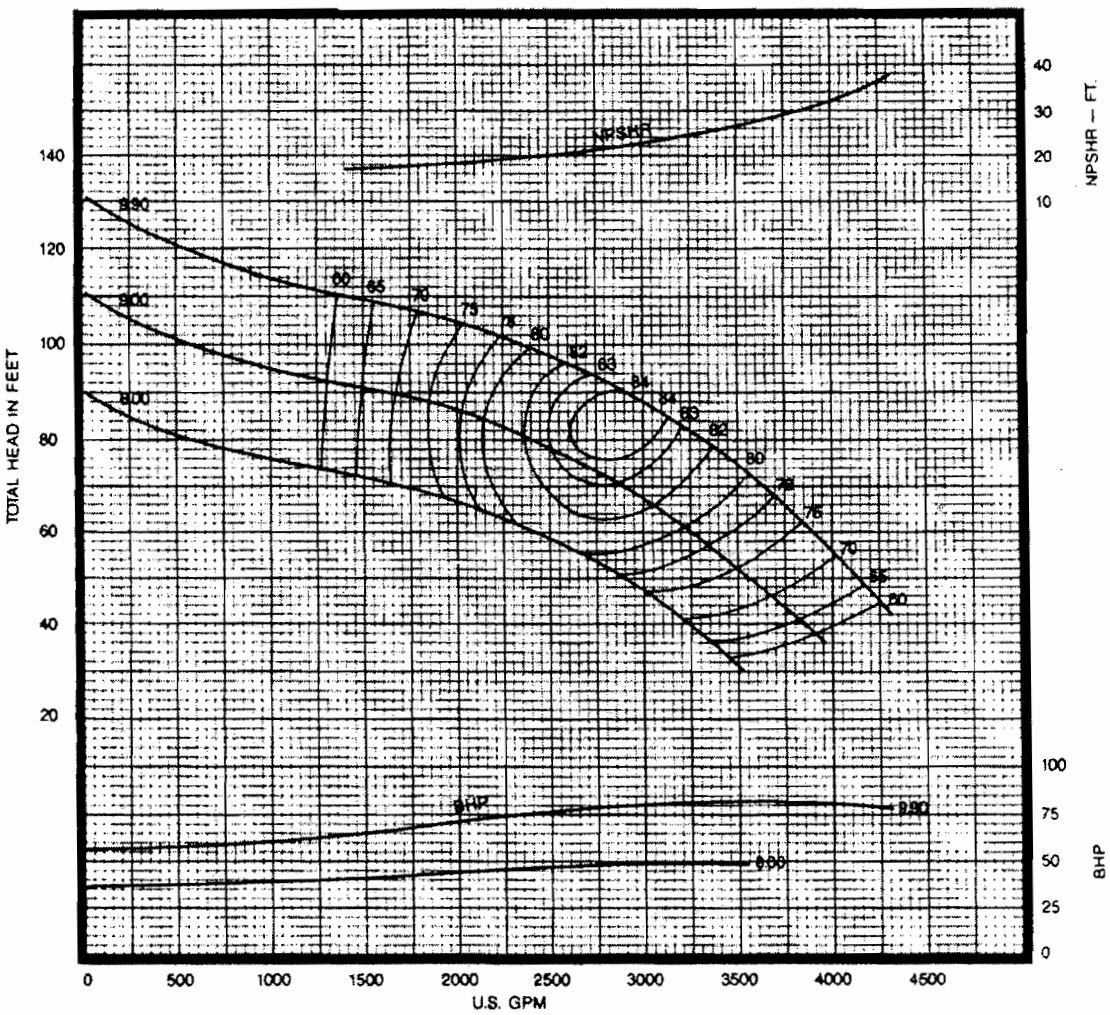

EFFICIENCY CORRECTIONS(1)

NUMBER OF STAGES	EFFICIENCY CHANGE
1	NA
2	NO CHANGE
3	NO CHANGE
4	NO CHANGE
5	NO CHANGE
6 OR MORE	NO CHANGE

BOWL MATERIAL	EFFICIENCY CHANGE
CAST IRON	-2.0 POINTS
ENAMELED C.I.	NO CHANGE

IMPELLER MATERIAL	EFFICIENCY CHANGE
CAST IRON	-1.0 POINTS
BRONZE	NO CHANGE
ENAMELED C.I.	NO CHANGE

(1) Refer to "Application and Reference Data" for head correction.

DIMENSIONS (Inches)

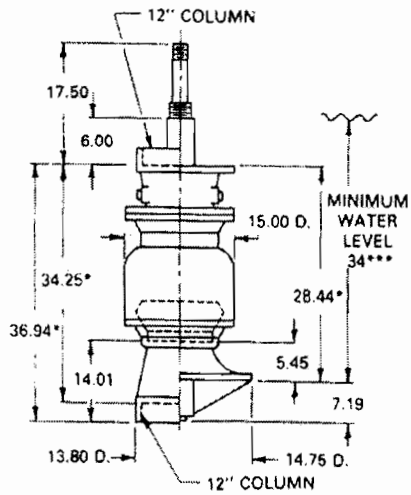

*Add 14.50 for each additional stage

TECHNICAL DATA

DATA	VALUE
MAXIMUM OPERATING SPEED	2100 RPM
MAXIMUM NUMBER OF STAGES	7**
PUMP SHAFT DIAMETER	1 15/16 IN.
IMPELLER EYE AREA	37.80 SQ. IN.
MAXIMUM SPHERE SIZE	1.31 IN.
K_t (THRUST FACTOR)	14.47 LBS./FT.
K_s (ROTOR WT. PER STAGE)	53.40 LBS.
BOWL WT. (FIRST STAGE)	469 LBS.
BOWL WT. (EACH ADD'L. STAGE)	200 LBS.
ALLOWABLE SHAFT STRETCH	86 IN.**
WK^2 (FIRST STAGE)	4.91 LBS./FT.^{2}
WK^2 (EACH ADD'L. STAGE)	4.69 LBS./FT.^{2}
BOWL RING CLEARANCE	.014/.018 IN.

** These are nominal values. Refer to "Application and Reference Data" for information further limiting or extending these values.

*** This value is the minimum submergence required to prevent vortexing only. This value may need to be increased to provide adequate NPSHA.