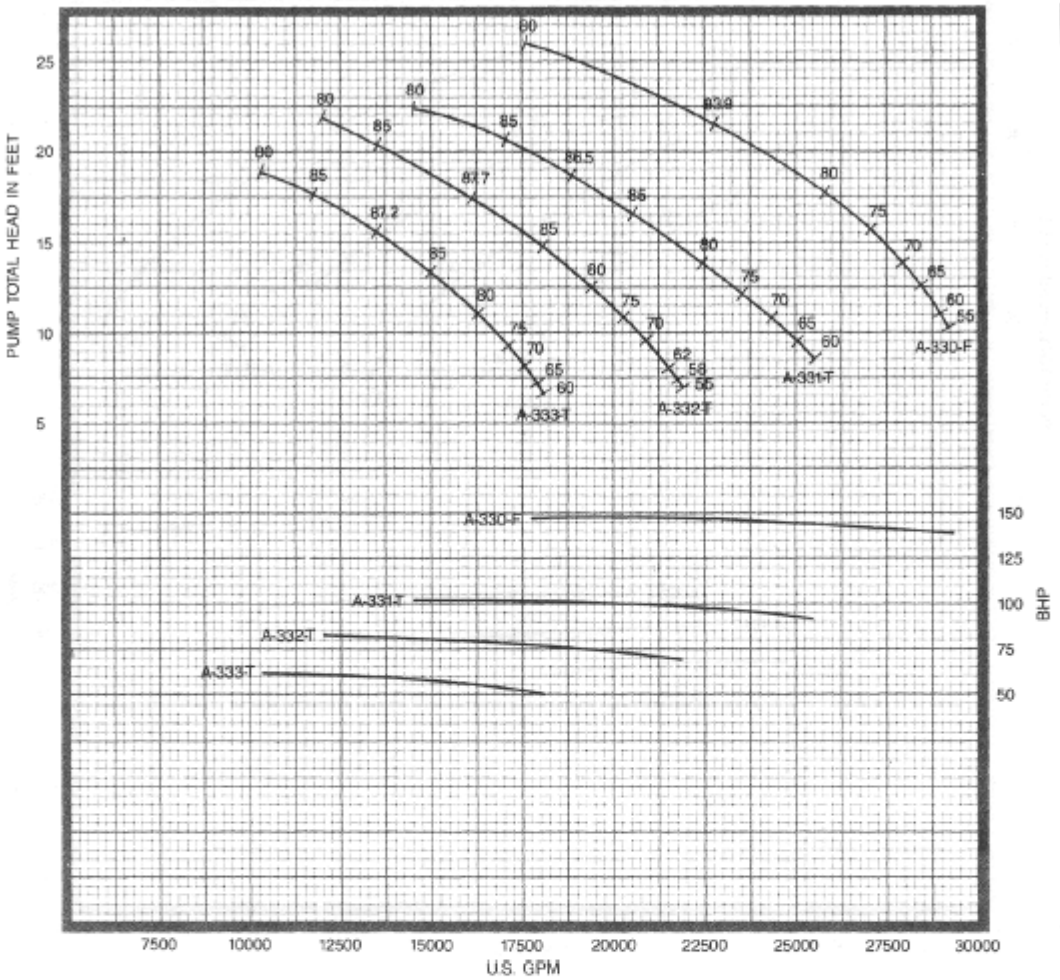

30″ 8312

500 RPM

1 STAGE

30″ COLUMN

30″ FABRICATED STEEL ELBOW

2-7/16″ LINESHAFT

3-1/2″ ENCLOSING TUBE

DATA	VALUE	
PUMP SHAFT DIAMETER	2.9375 IN.	
MAXIMUM SPHERE SIZE	4.50 IN.	
Kt (THRUST FACTOR)	185 LBS./FT.	
Ka (TOTAL ROTOR WEIGHT)	310 LBS.	
Ks (SETTING CONSTANT)	15.9 LBS./FT.	
WK^2	195 LBS.-FT.^{2}	
BOWL ASSEMBLY WEIGHT	2500 LBS.	
EYE AREA: PROPELLER NO. A-330-F	367.8 SQ. IN.	4 VANE
PROPELLER NO. A-331-T	367.8 SQ. IN.	3 VANE
PROPELLER NO. A-332-T	367.8 SQ. IN.	3 VANE
PROPELLER NO. A-333-T	367.8 SQ. IN.	3 VANE
PROPELLER NO.		
PROPELLER NO.		

HYDRAULIC PERFORMANCE IS CONTINGENT ON FURNISHING THE PUMP WITH SPECIFIED AMOUNT OF CLEAR, FRESH, NON-AERATED WATER NOT TO EXCEED 85° F.

PUMP PERFORMANCE SHOWN IS BOWL ASSEMBLY WITH 10 FEET OF COLUMN INCLUDING A STANDARD ABOVE GROUND DISCHARGE ELBOW. ADDITIONAL COLUMN LOSSES SHOULD BE ADDED WHEN SETTINGS ARE DEEPER THAN 10 FEET AND/OR FOR OTHER DISCHARGE ARRANGEMENTS.

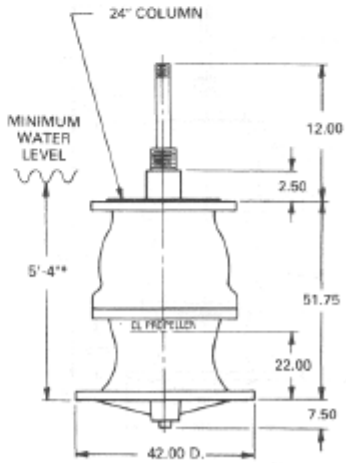

*This value is the minimum submergence required to prevent vortexing only. This value may need to be increased to provide adequate NPSHA.

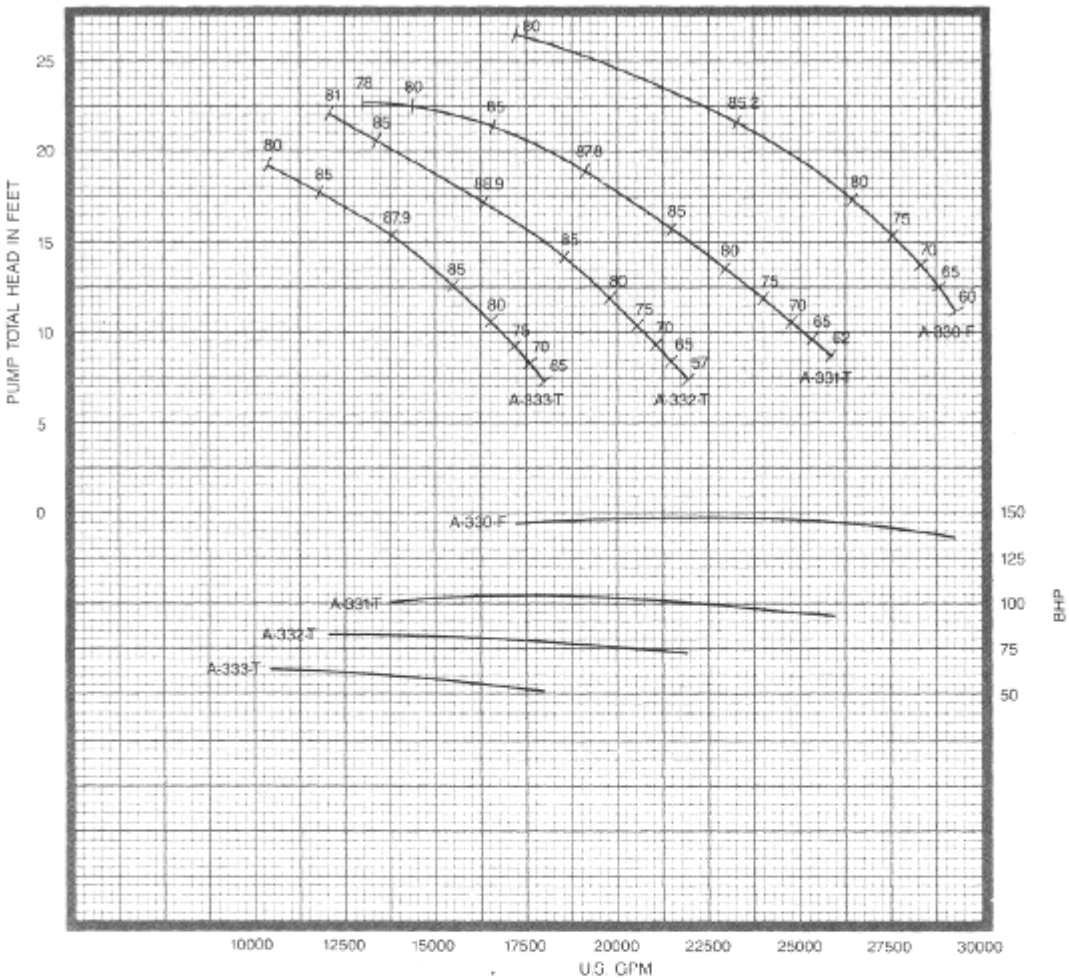

30″ 8312

500 RPM

1 STAGE

36″ COLUMN

36″ FABRICATED STEEL ELBOW

2-7/16″ LINESHAFT

3-1/2″ ENCLOSING TUBE

DATA	VALUE	
PUMP SHAFT DIAMETER	2.9375 IN.	
MAXIMUM SPHERE SIZE	4.50 IN.	
K_t (THRUST FACTOR)	185 LBS./FT.	
K_a (TOTAL ROTOR WEIGHT)	310 LBS.	
K_s (SETTING CONSTANT)	15.9 LBS./FT.	
WK^2	195 LBS.-FT.^{2}	
BOWL ASSEMBLY WEIGHT	2500 LBS.	
EYE AREA: PROPELLER NO. A-330-F	367.8 SQ. IN.	4 VANE
PROPELLER NO. A-331-T	367.8 SQ. IN.	3 VANE
PROPELLER NO. A-332-T	367.8 SQ. IN.	3 VANE
PROPELLER NO. A-333-T	367.8 SQ. IN.	3 VANE
PROPELLER NO.		
PROPELLER NO.		

HYDRAULIC PERFORMANCE IS CONTINGENT ON FURNISHING THE PUMP WITH SPECIFIED AMOUNT OF CLEAR, FRESH, NON-AERATED WATER NOT TO EXCEED 85° F.

PUMP PERFORMANCE SHOWN IS BOWL ASSEMBLY WITH 10 FEET OF COLUMN INCLUDING A STANDARD ABOVE GROUND DISCHARGE ELBOW. ADDITIONAL COLUMN LOSSES SHOULD BE ADDED WHEN SETTINGS ARE DEEPER THAN 10 FEET AND/OR FOR OTHER DISCHARGE ARRANGEMENTS.

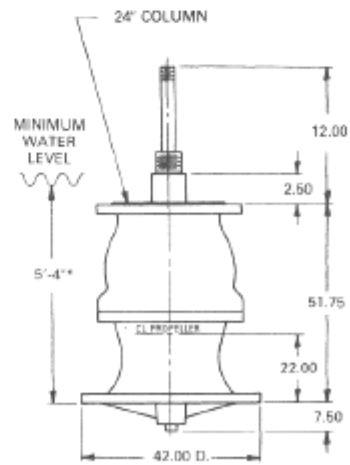

*This value is the minimum submergence required to prevent vortexing only. This value may need to be increased to provide adequate NPSHA.

30″ 8312

500 RPM

2 STAGE

30″ COLUMN

30″ FABRICATED STEEL ELBOW

2-15/16″ LINESHAFT

5″ ENCLOSING TUBE

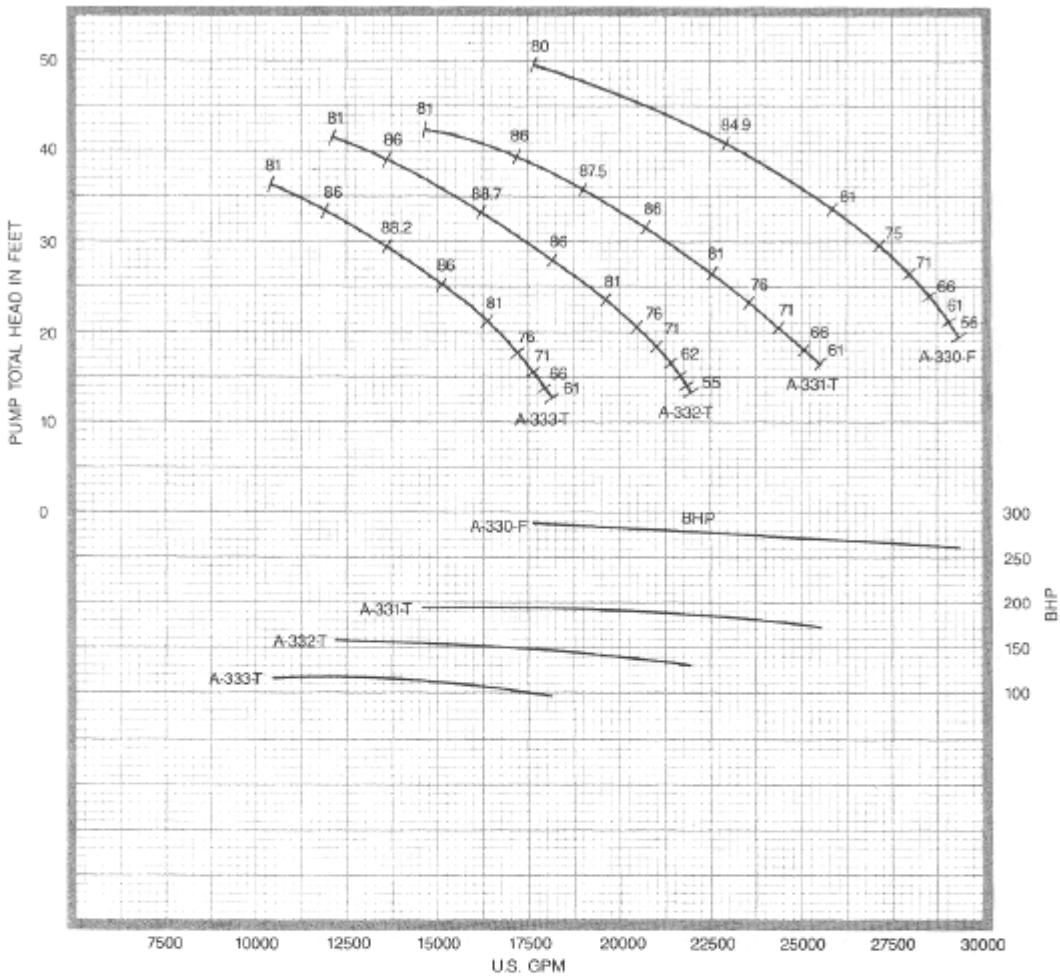

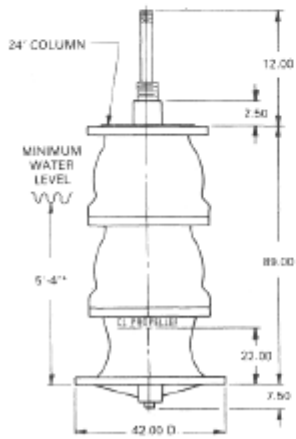

*This value is the minimum submergence required to prevent vortexing only. This value may need to be increased to provide adequate NPSHA.

DATA	VALUE	
PUMP SHAFT DIAMETER	2.9375 IN.	
MAXIMUM SPHERE SIZE	4.50 IN.	
K_t (THRUST FACTOR)	185 LBS./FT.	
K_B (TOTAL ROTOR WEIGHT)	620 LBS.	
K_S (SETTING CONSTANT)	23.0 LBS./FT.	
WK^2	390 LBS.-FT.^{2}	
BOWL ASSEMBLY WEIGHT	4300 LBS.	
EYE AREA: PROPELLER NO. A-330-F	367.8 SQ. IN.	4 VANE
PROPELLER NO. A-331-T	367.8 SQ. IN.	3 VANE
PROPELLER NO. A-332-T	367.8 SQ. IN.	3 VANE
PROPELLER NO. A-333-T	367.8 SQ. IN.	3 VANE
PROPELLER NO.		
PROPELLER NO.		

HYDRAULIC PERFORMANCE IS CONTINGENT ON FURNISHING THE PUMP WITH SPECIFIED AMOUNT OF CLEAR, FRESH, NON-AERATED WATER NOT TO EXCEED 85° F.

PUMP PERFORMANCE SHOWN IS BOWL ASSEMBLY WITH 10 FEET OF COLUMN INCLUDING A STANDARD ABOVE GROUND DISCHARGE ELBOW. ADDITIONAL COLUMN LOSSES SHOULD BE ADDED WHEN SETTINGS ARE DEEPER THAN 10 FEET AND/OR FOR OTHER DISCHARGE ARRANGEMENTS.

30″ 8312

500 RPM

2 STAGE

36″ COLUMN

36″ FABRICATED STEEL ELBOW

2-15/16″ LINESHAFT

5″ ENCLOSING TUBE

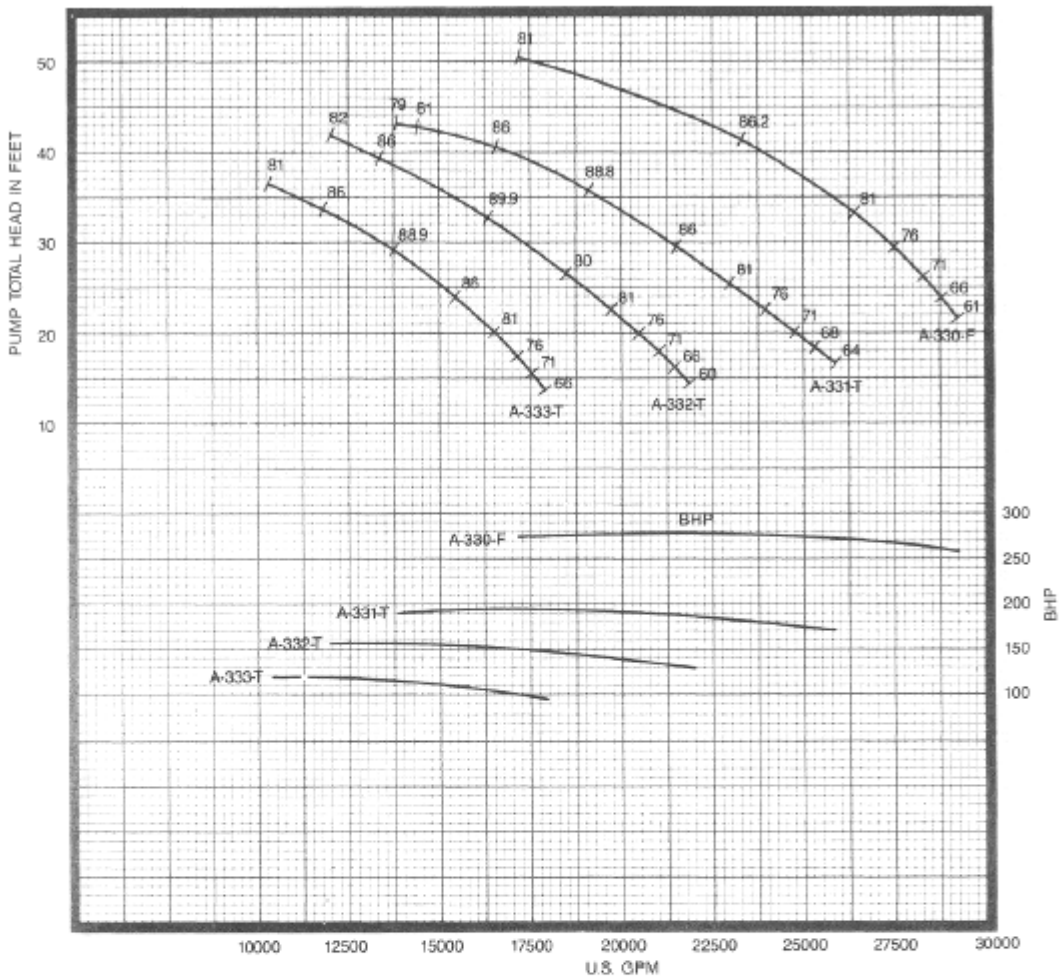

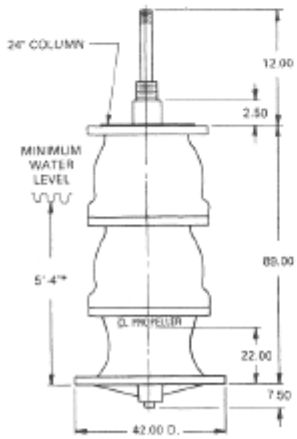

*This value is the minimum submergence required to prevent vortexing only. This value may need to be increased to provide adequate NPSHA.

DATA	VALUE	
PUMP SHAFT DIAMETER	2.9375 IN.	
MAXIMUM SPHERE SIZE	4.50 IN.	
K_t (THRUST FACTOR)	185 LBS./FT.	
K_a (TOTAL ROTOR WEIGHT)	620 LBS.	
K_s (SETTING CONSTANT)	23.0 LBS./FT.	
WK^2	390 LBS.-FT.^{2}	
BOWL ASSEMBLY WEIGHT	4300 LBS.	
EYE AREA: PROPELLER NO. A-330-F	367.8 SQ. IN.	4 VANE
PROPELLER NO. A-331-T	367.8 SQ. IN.	3 VANE
PROPELLER NO. A-332-T	367.8 SQ. IN.	3 VANE
PROPELLER NO. A-333-T	367.8 SQ. IN.	3 VANE
PROPELLER NO.		
PROPELLER NO.		

HYDRAULIC PERFORMANCE IS CONTINGENT ON FURNISHING THE PUMP WITH SPECIFIED AMOUNT OF CLEAR, FRESH, NON-AERATED WATER NOT TO EXCEED 85° F.

PUMP PERFORMANCE SHOWN IS BOWL ASSEMBLY WITH 10 FEET OF COLUMN INCLUDING A STANDARD ABOVE GROUND DISCHARGE ELBOW. ADDITIONAL COLUMN LOSSES SHOULD BE ADDED WHEN SETTINGS ARE DEEPER THAN 10 FEET AND/OR FOR OTHER DISCHARGE ARRANGEMENTS.