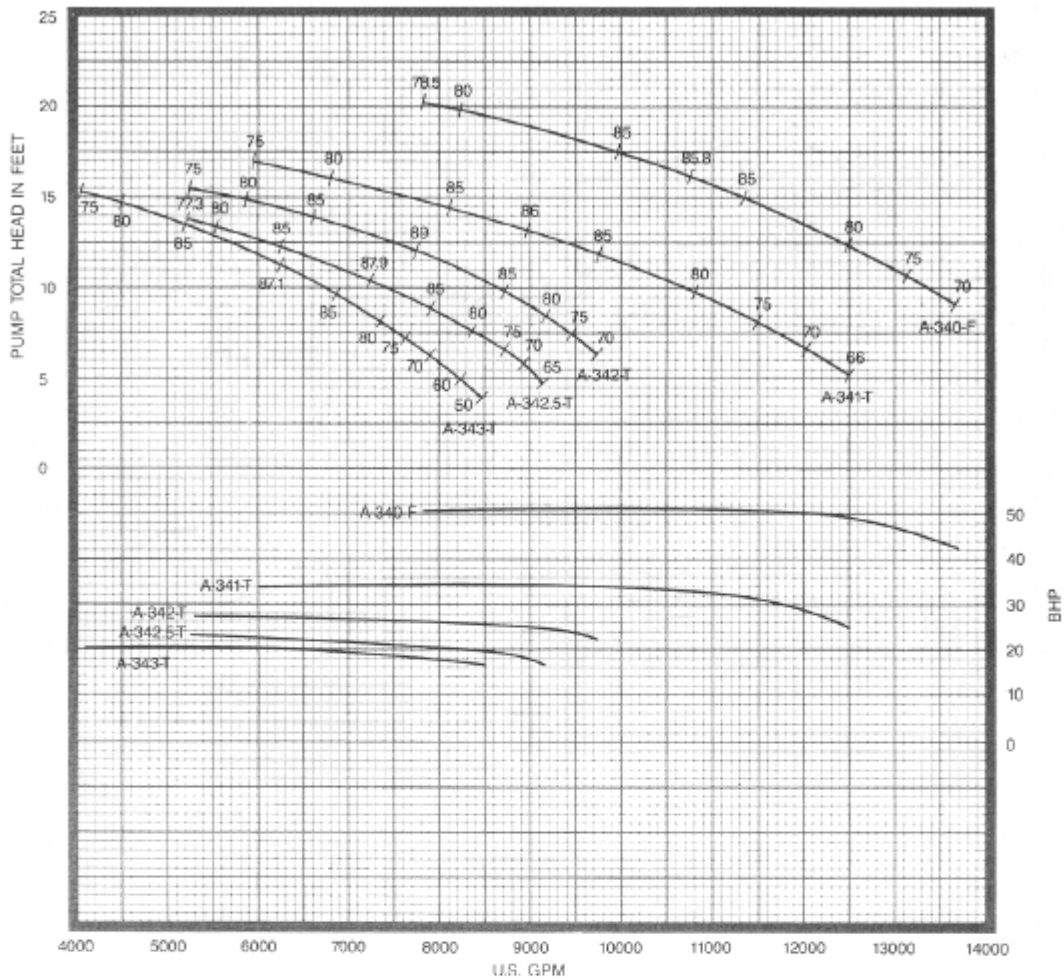

20″ 8312

580 RPM

1 STAGE

20″ COLUMN

20″ FABRICATED STEEL ELBOW

1-11/16″ LINESHAFT

2-1/2″ ENCLOSING TUBE

DATA	VALUE	
PUMP SHAFT DIAMETER	1.9375 IN.	
MAXIMUM SPHERE SIZE	3.38 IN.	
K_t (THRUST FACTOR)	101 LBS./FT.	
K_a (TOTAL ROTOR WEIGHT)	125 LBS.	
K_s (SETTING CONSTANT)	7.6 LBS./FT.	
WK^2	43 LBS.-FT.^{2}	
BOWL ASSEMBLY WEIGHT	1300 LBS.	
EYE AREA: PROPELLER NO. A-340-F	203.0 SQ. IN.	4 VANE
PROPELLER NO. A-341-T	203.0 SQ. IN.	3 VANE
PROPELLER NO. A-342-T	203.0 SQ. IN.	3 VANE
PROPELLER NO. A-342.5-T	203.0 SQ. IN.	3 VANE
PROPELLER NO. A-343-T	203.0 SQ. IN.	3 VANE
PROPELLER NO.		

HYDRAULIC PERFORMANCE IS CONTINGENT ON FURNISHING THE PUMP WITH SPECIFIED AMOUNT OF CLEAR, FRESH, NON-AERATED WATER NOT TO EXCEED 85° F.

PUMP PERFORMANCE SHOWN IS BOWL ASSEMBLY WITH 10 FEET OF COLUMN INCLUDING A STANDARD ABOVE GROUND DISCHARGE ELBOW. ADDITIONAL COLUMN LOSSES SHOULD BE ADDED WHEN SETTINGS ARE DEEPER THAN 10 FEET AND/OR FOR OTHER DISCHARGE ARRANGEMENTS.

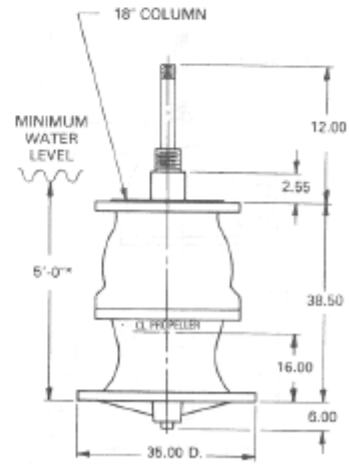

*This value is the minimum submergence required to prevent vortexing only. This value may need to be increased to provide adequate NPSHA.

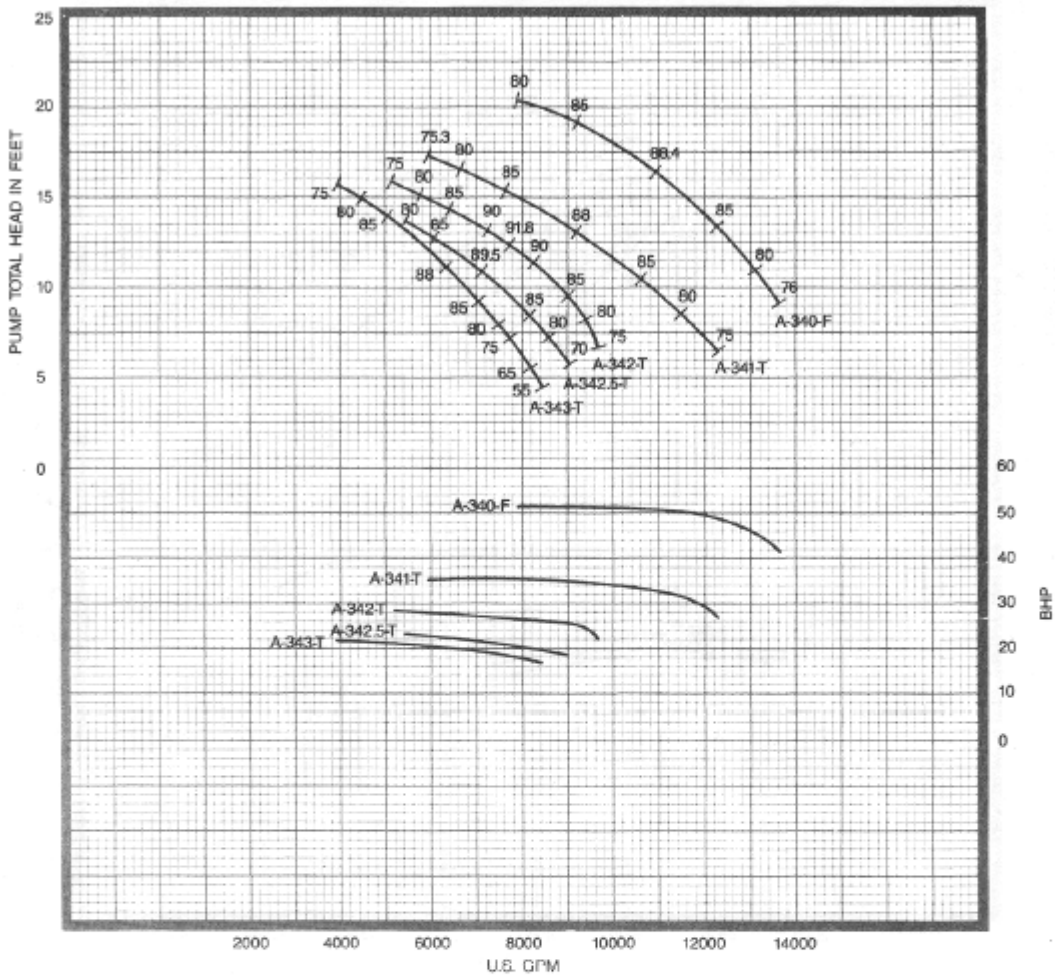

20″ 8312

580 RPM

1 STAGE

24″ COLUMN

24″ FABRICATED STEEL ELBOW

1-11/16″ LINESHAFT

2-1/2″ ENCLOSING TUBE

DATA		VALUE	
PUMP SHAFT DIAMETER		1.9375 IN.	
MAXIMUM SPHERE SIZE		3.38 IN.	
K_t (THRUST FACTOR)		101 LBS./FT.	
K_a (TOTAL ROTOR WEIGHT)		125 LBS.	
K_s (SETTING CONSTANT)		7.6 LBS./FT.	
WK^2		43 LBS.-FT.^{2}	
BOWL ASSEMBLY WEIGHT		1300 LBS.	
EYE AREA:	PROPELLER NO. A-340-F	203.0 SQ. IN.	4 VANE
	PROPELLER NO. A-341-T	203.0 SQ. IN.	3 VANE
	PROPELLER NO. A-342-T	203.0 SQ. IN.	3 VANE
	PROPELLER NO. A-342.5-T	203.0 SQ. IN.	3 VANE
	PROPELLER NO. A-343-T	203.0 SQ. IN.	3 VANE
	PROPELLER NO.		

HYDRAULIC PERFORMANCE IS CONTINGENT ON FURNISHING THE PUMP WITH SPECIFIED AMOUNT OF CLEAR, FRESH, NON-AERATED WATER NOT TO EXCEED 85° F.

PUMP PERFORMANCE SHOWN IS BOWL ASSEMBLY WITH 10 FEET OF COLUMN INCLUDING A STANDARD ABOVE GROUND DISCHARGE ELBOW. ADDITIONAL COLUMN LOSSES SHOULD BE ADDED WHEN SETTINGS ARE DEEPER THAN 10 FEET AND/OR FOR OTHER DISCHARGE ARRANGEMENTS.

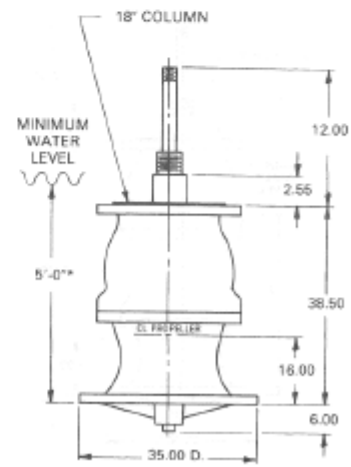

*This value is the minimum submergence required to prevent vortexing only. This value may need to be increased to provide adequate NPSHA.

20″ 8312

580 RPM

2 STAGE

20″ COLUMN

20″ FABRICATED STEEL ELBOW

1-15/16″ LINESHAFT

3″ ENCLOSING TUBE

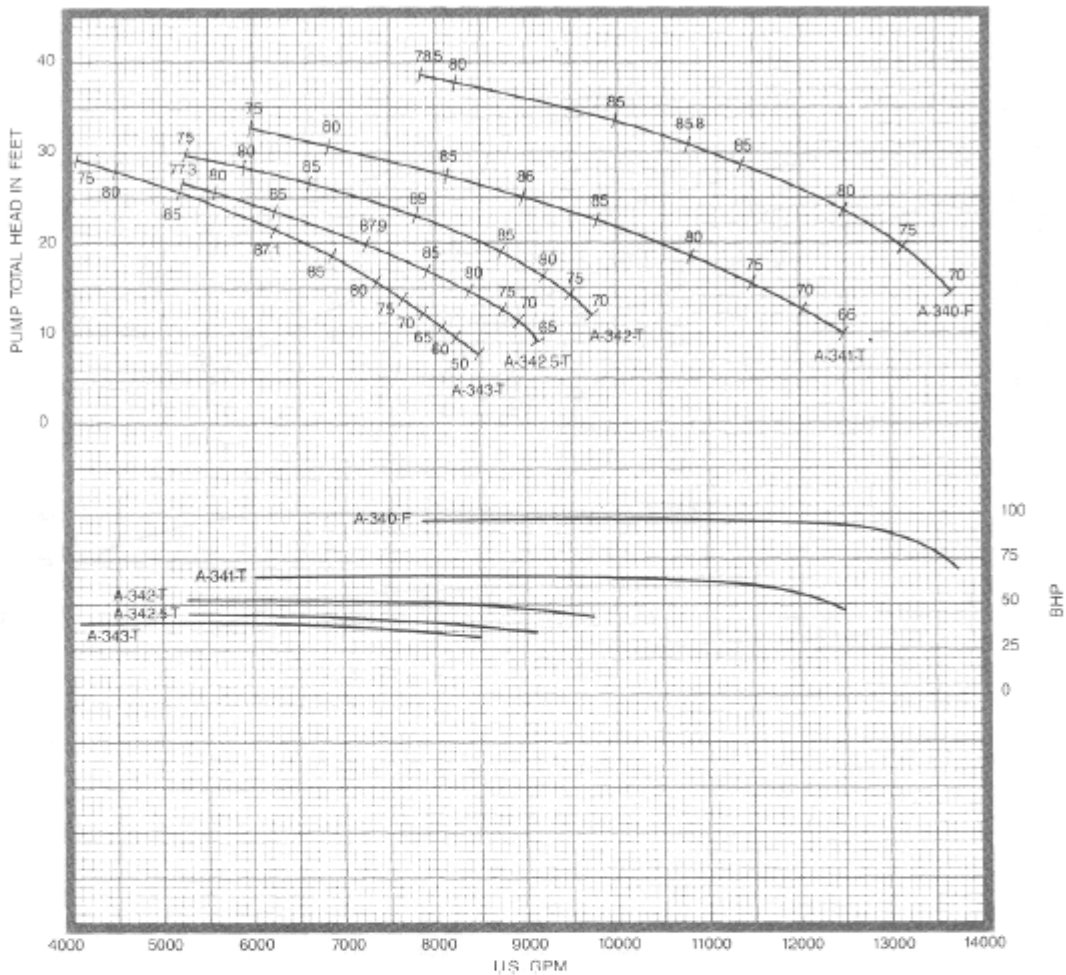

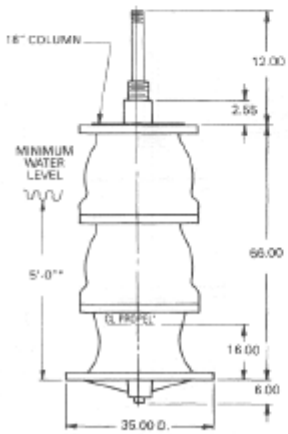

*This value is the minimum submergence required to prevent vortexing only. This value may need to be increased to provide adequate NPSHA.

DATA	VALUE	
PUMP SHAFT DIAMETER	1.9375 IN.	
MAXIMUM SPHERE SIZE	3.38 IN.	
K_t (THRUST FACTOR)	101 LBS./FT.	
K_a (TOTAL ROTOR WEIGHT)	250 LBS.	
K_s (SETTING CONSTANT)	10.0 LBS./FT.	
WK^2	86 LBS.-FT.^{2}	
BOWL ASSEMBLY WEIGHT	2150 LBS.	
EYE AREA: PROPELLER NO. A-340-F	203.0 SQ. IN.	4 VANE
PROPELLER NO. A-341-T	203.0 SQ. IN.	3 VANE
PROPELLER NO. A-342-T	203.0 SQ. IN.	3 VANE
PROPELLER NO. A-342.5-T	203.0 SQ. IN.	3 VANE
PROPELLER NO. A-343-T	203.0 SQ. IN.	3 VANE
PROPELLER NO.		

HYDRAULIC PERFORMANCE IS CONTINGENT ON FURNISHING THE PUMP WITH SPECIFIED AMOUNT OF CLEAR, FRESH, NON-AERATED WATER NOT TO EXCEED 85° F.

PUMP PERFORMANCE SHOWN IS BOWL ASSEMBLY WITH 10 FEET OF COLUMN INCLUDING A STANDARD ABOVE GROUND DISCHARGE ELBOW. ADDITIONAL COLUMN LOSSES SHOULD BE ADDED WHEN SETTINGS ARE DEEPER THAN 10 FEET AND/OR FOR OTHER DISCHARGE ARRANGEMENTS.

20″ 8312

580 RPM

2 STAGE

24″ COLUMN

24″ FABRICATED STEEL ELBOW

1-15/16″ LINESHAFT

3″ ENCLOSING TUBE

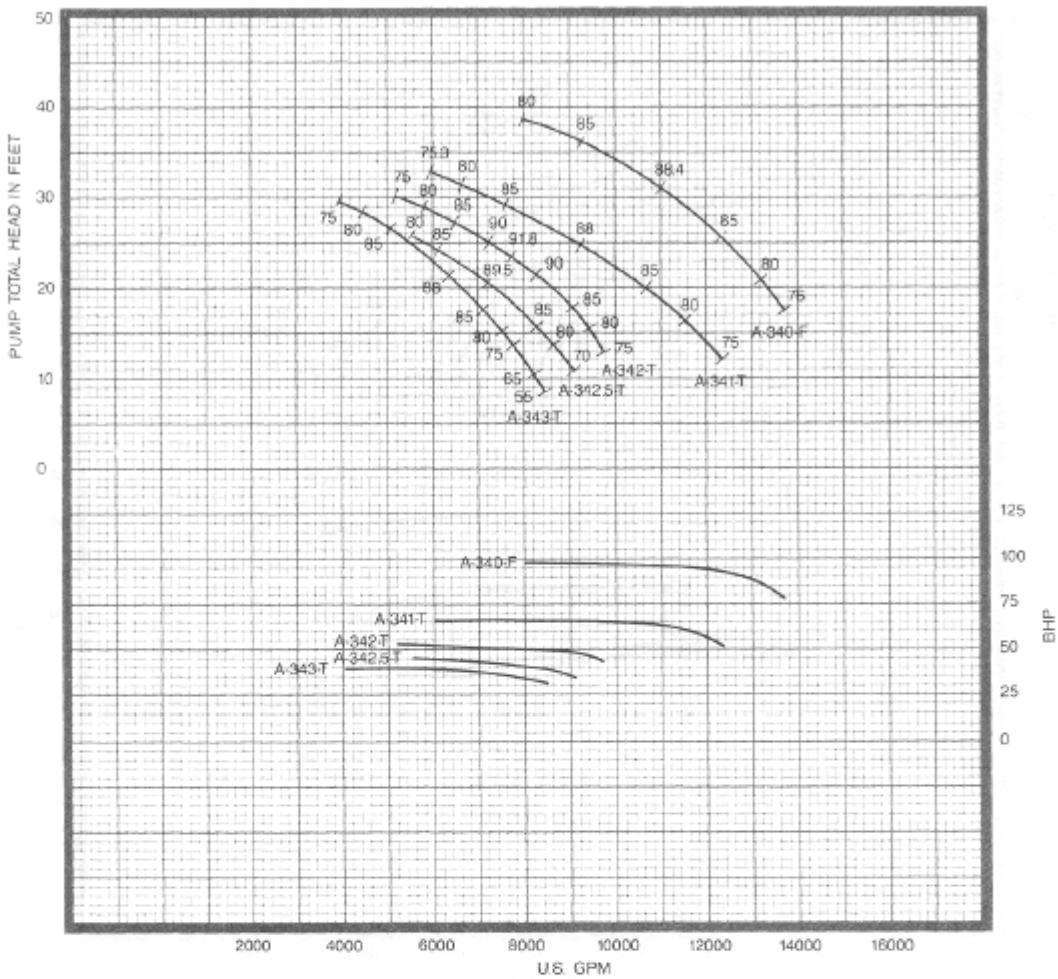

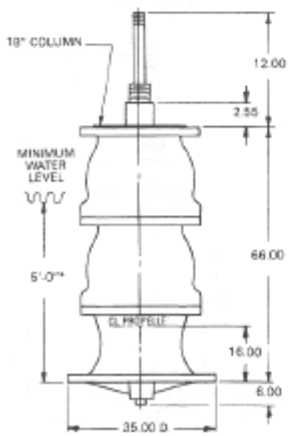

*This value is the minimum submergence required to prevent vortexing only. This value may need to be increased to provide adequate NPSHA.

DATA	VALUE	
PUMP SHAFT DIAMETER	1.9375 IN.	
MAXIMUM SPHERE SIZE	3.38 IN.	
K_t (THRUST FACTOR)	101 LBS./FT.	
K_a (TOTAL ROTOR WEIGHT)	250 LBS.	
K_s (SETTING CONSTANT)	10.0 LBS./FT.	
WK^2	86 LBS.-FT.^{2}	
BOWL ASSEMBLY WEIGHT	2150 LBS.	
EYE AREA: PROPELLER NO. A-340-F	203.0 SQ. IN.	4 VANE
PROPELLER NO. A-341-T	203.0 SQ. IN.	3 VANE
PROPELLER NO. A-342-T	203.0 SQ. IN.	3 VANE
PROPELLER NO. A-342.5-T	203.0 SQ. IN.	3 VANE
PROPELLER NO. A-343-T	203.0 SQ. IN.	3 VANE
PROPELLER NO.		

HYDRAULIC PERFORMANCE IS CONTINGENT ON FURNISHING THE PUMP WITH SPECIFIED AMOUNT OF CLEAR, FRESH, NON-AERATED WATER NOT TO EXCEED 85° F.

PUMP PERFORMANCE SHOWN IS BOWL ASSEMBLY WITH 10 FEET OF COLUMN INCLUDING A STANDARD ABOVE GROUND DISCHARGE ELBOW. ADDITIONAL COLUMN LOSSES SHOULD BE ADDED WHEN SETTINGS ARE DEEPER THAN 10 FEET AND/OR FOR OTHER DISCHARGE ARRANGEMENTS.