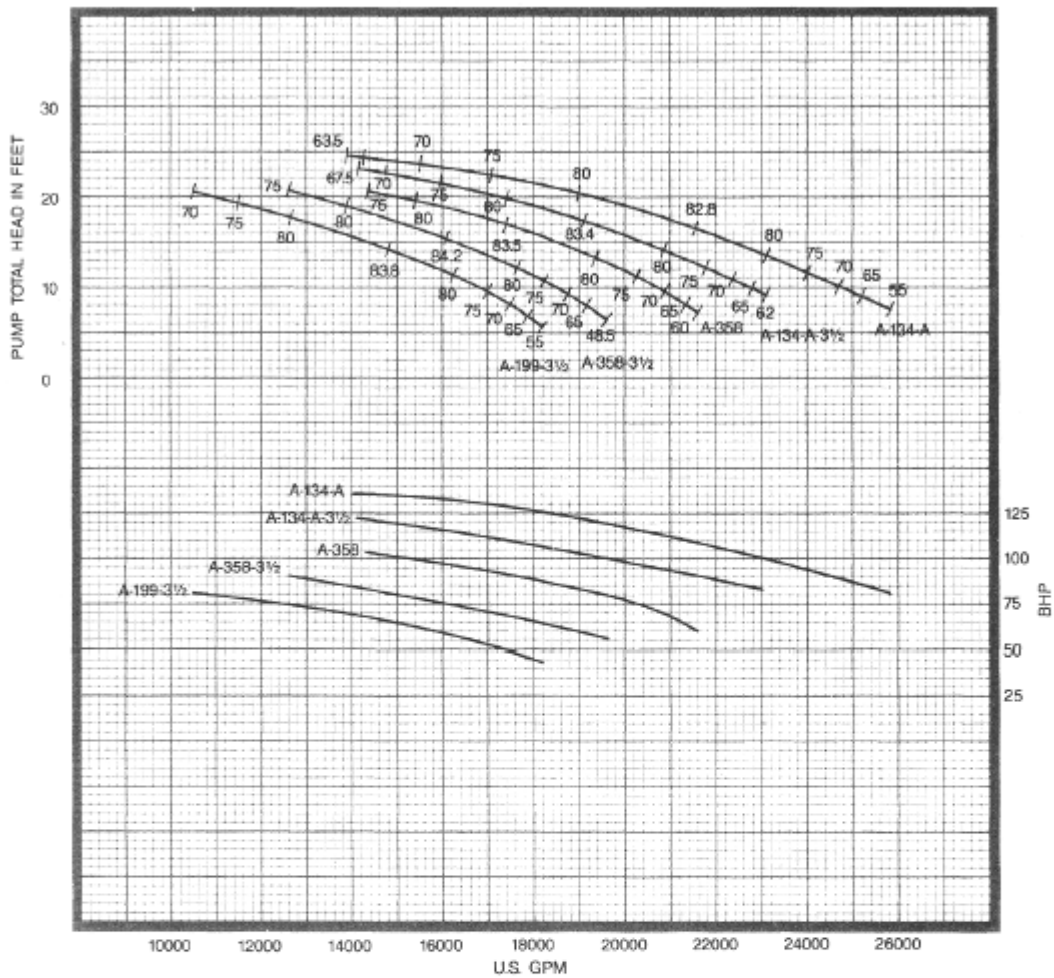

30″
8211

580 RPM

1 STAGE

30″ COLUMN

30″ FABRICATED STEEL ELBOW

2-3/16″ LINESHAFT

3″ ENCLOSING TUBE

DATA	VALUE	
PUMP SHAFT DIAMETER	2.4375 IN.	
MAXIMUM SPHERE SIZE	4.00 IN.	
K_t (THRUST FACTOR)	215 LBS./FT.	
K_a (TOTAL ROTOR WEIGHT)	270 LBS.	
K_s (SETTING CONSTANT)	12.8 LBS./FT.	
WK^2	152 LBS.-FT.^{2}	
BOWL ASSEMBLY WEIGHT	1900 LBS.	
EYE AREA: PROPELLER NO. A-199-3 1/2	351.0 SQ. IN.	3 VANE
PROPELLER NO. A-358-3 1/2	351.0 SQ. IN.	3 VANE
PROPELLER NO. A-358	384.7 SQ. IN.	3 VANE
PROPELLER NO. A-134-A-3 1/2	351.0 SQ. IN.	4 VANE
PROPELLER NO. A-134-A	384.7 SQ. IN.	4 VANE
PROPELLER NO.		

HYDRAULIC PERFORMANCE IS CONTINGENT ON FURNISHING THE PUMP WITH SPECIFIED AMOUNT OF CLEAR, FRESH, NON-AERATED WATER NOT TO EXCEED 85° F.

PUMP PERFORMANCE SHOWN IS BOWL ASSEMBLY WITH 10 FEET OF COLUMN INCLUDING A STANDARD ABOVE GROUND DISCHARGE ELBOW. ADDITIONAL COLUMN LOSSES SHOULD BE ADDED WHEN SETTINGS ARE DEEPER THAN 10 FEET AND/OR FOR OTHER DISCHARGE ARRANGEMENTS.

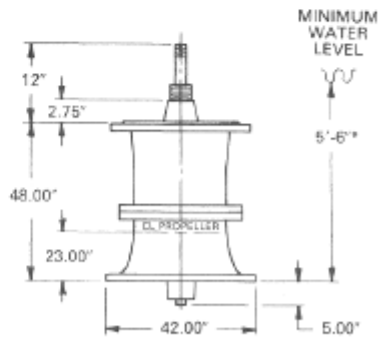

*This value is the minimum submergence required to prevent vortexing only. This value may need to be increased to provide adequate NPSHA.

30″ 8211

580 RPM

2 STAGE

30″ COLUMN

30″ FABRICATED STEEL ELBOW

2-7/16″ LINESHAFT

3-1/2″ ENCLOSING TUBE

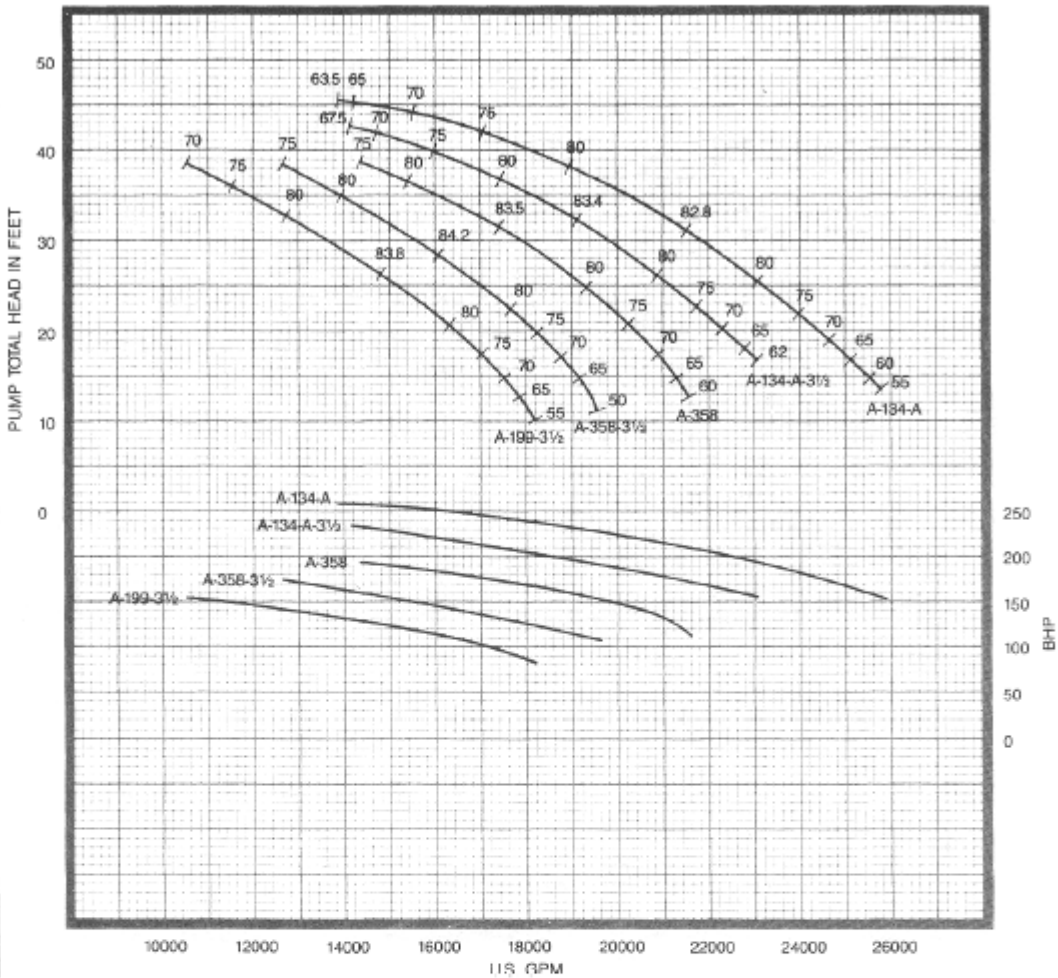

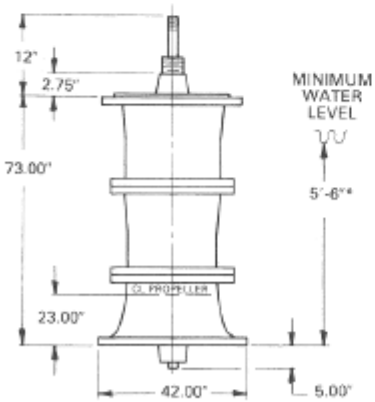

*This value is the minimum submergence required to prevent vortexing only. This value may need to be increased to provide adequate NPSHA.

DATA	VALUE	
PUMP SHAFT DIAMETER	2.4375 IN.	
MAXIMUM SPHERE SIZE	4.00 IN.	
Kt (THRUST FACTOR)	215 LBS./FT.	
Ka (TOTAL ROTOR WEIGHT)	540 LBS.	
Ks (SETTING CONSTANT)	15.9 LBS./FT.	
WK^2	304 LBS.-FT.^{2}	
BOWL ASSEMBLY WEIGHT	2780 LBS.	
EYE AREA: PROPELLER NO. A-199-3 1/2	351.0 SQ. IN.	3 VANE
PROPELLER NO. A-358-3 1/2	351.0 SQ. IN.	3 VANE
PROPELLER NO. A-358	384.7 SQ. IN.	3 VANE
PROPELLER NO. A-134-A-3 1/2	351.0 SQ. IN.	4 VANE
PROPELLER NO. A-134-A	384.7 SQ. IN.	4 VANE
PROPELLER NO.		

HYDRAULIC PERFORMANCE IS CONTINGENT ON FURNISHING THE PUMP WITH SPECIFIED AMOUNT OF CLEAR, FRESH, NON-AERATED WATER NOT TO EXCEED 85° F.

PUMP PERFORMANCE SHOWN IS BOWL ASSEMBLY WITH 10 FEET OF COLUMN INCLUDING A STANDARD ABOVE GROUND DISCHARGE ELBOW. ADDITIONAL COLUMN LOSSES SHOULD BE ADDED WHEN SETTINGS ARE DEEPER THAN 10 FEET AND/OR FOR OTHER DISCHARGE ARRANGEMENTS.