VERTICAL TURBINE PUMPS
SINGLE STAGE PERFORMANCE

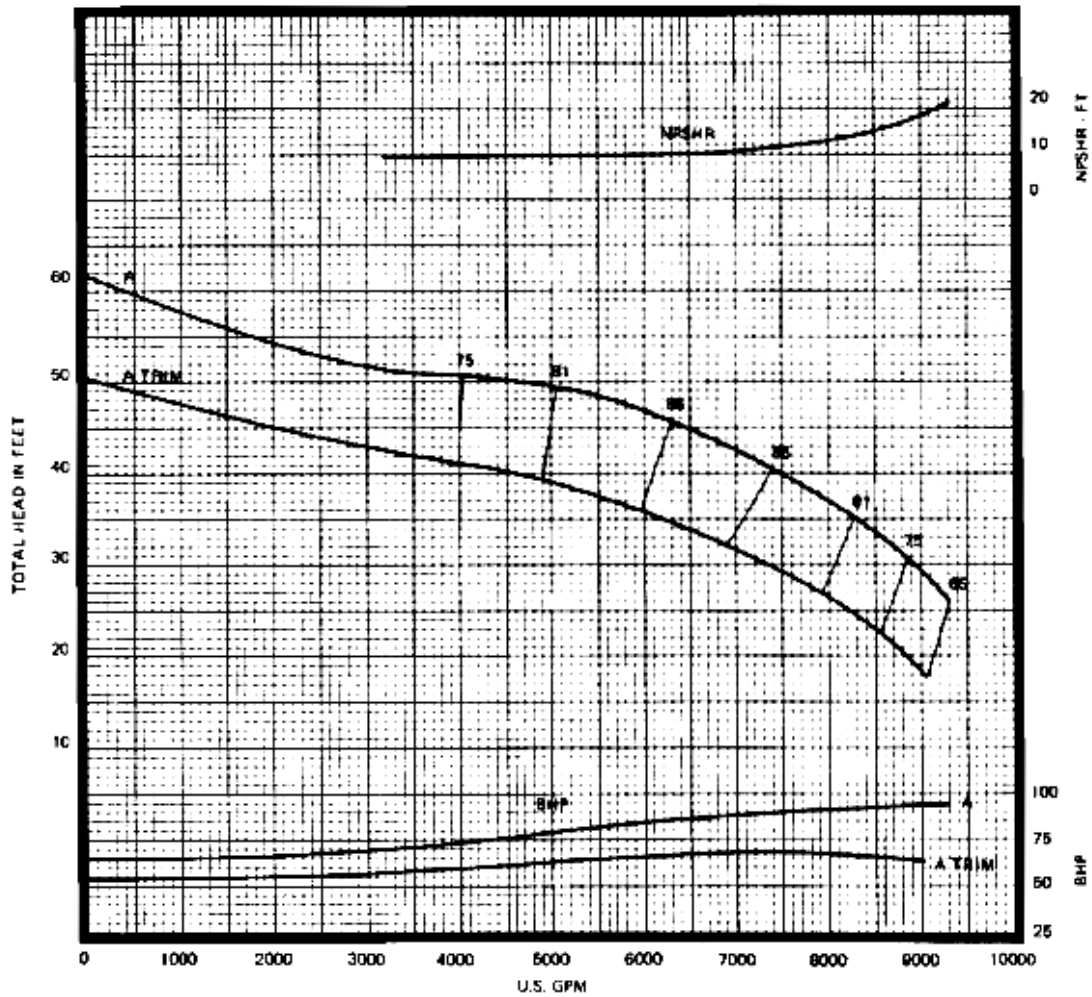

32MC 6970

580 RPM

IMPELLER YT6P92

EFFICIENCY CORRECTIONS (1)

NUMBER OF STAGES	EFFICIENCY CHANGE
1	-1.0 POINTS
2	NO CHANGE
3	NO CHANGE
4	NO CHANGE
5	NO CHANGE
6	NO CHANGE

BOWL MATERIAL	EFFICIENCY CHANGE
CAST IRON	- 1.0 POINTS
EPOXIED C.I.	NO CHANGE

IMPELLER MATERIAL	EFFICIENCY CHANGE
CAST IRON	- 1.0 POINTS
BRONZE	NO CHANGE
EPOXIED C.I.	NO CHANGE

(1) Refer to selection data for head correction.

DIMENSIONS (Inches)

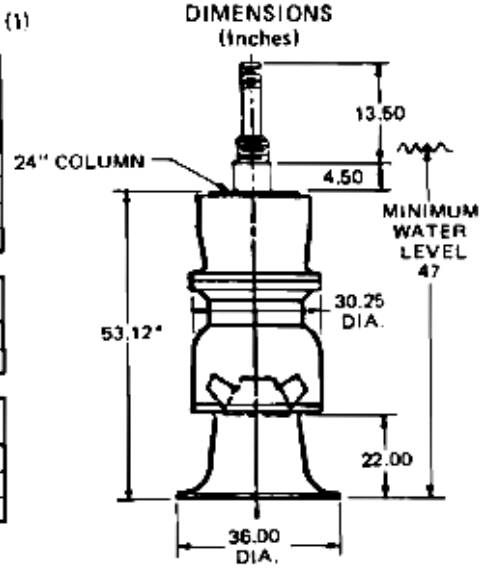

*Add 23.50 for each additional stage.

TECHNICAL DATA

DATA	VALUE
MAXIMUM OPERATING SPEED	900 RPM
MAXIMUM NUMBER OF STAGES	8**
PUMP SHAFT DIAMETER	4 IN.
IMPELLER EYE AREA	169 SQ.IN.
MAXIMUM SPHERE SIZE	2.13 IN
K_1 (THRUST FACTOR)	105 LBS./FT.
K_2 (ROTOR WT. PER STAGE)	234 LBS.
BOWL WT. (FIRST STAGE)	2500 LBS.
BOWL WT. (EACH ADD'L STAGE)	1400 LBS.
ALLOWABLE SHAFT STRETCH	.75 IN.**
WK^2 (FIRST STAGE)	178.30 LBS.-FT.^{2}
WK^2 (EACH ADD'L STAGE)	110.60 LBS.-FT.^{2}
BOWL RING CLEARANCE	NA

**These are nominal values. Refer to selection data for information further limiting or extending these values.