VERTICAL TURBINE PUMPS
SINGLE STAGE PERFORMANCE

24XH
6920

705 RPM

IMPELLER
T5MB268

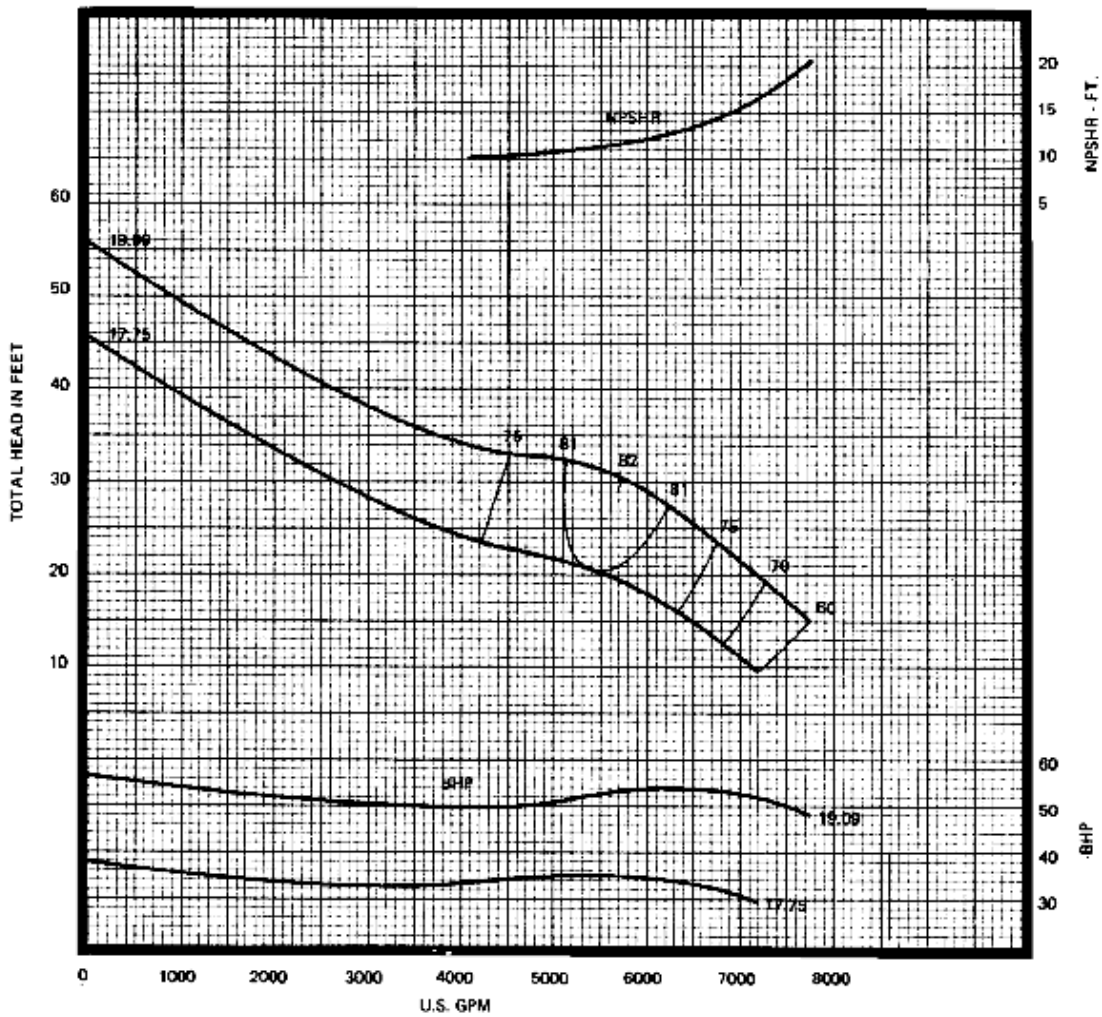

EFFICIENCY CORRECTIONS (1)

NUMBER OF STAGES	EFFICIENCY CHANGE
1	- 2.0 POINTS
2	- 1.0 POINTS
3	NO CHANGE
4	NO CHANGE
5	NO CHANGE
6 OR MORE	NO CHANGE

BOWL MATERIAL	EFFICIENCY CHANGE
CAST IRON	- 1.0 POINTS
EPOXIED C.I.	NO CHANGE

IMPELLER MATERIAL	EFFICIENCY CHANGE
CAST IRON	- 1.0 POINTS
BRONZE	NO CHANGE
EPOXIED C.I.	NO CHANGE

(1) Refer to "Application and Reference Data" for head correction.

DIMENSIONS
(Inches)

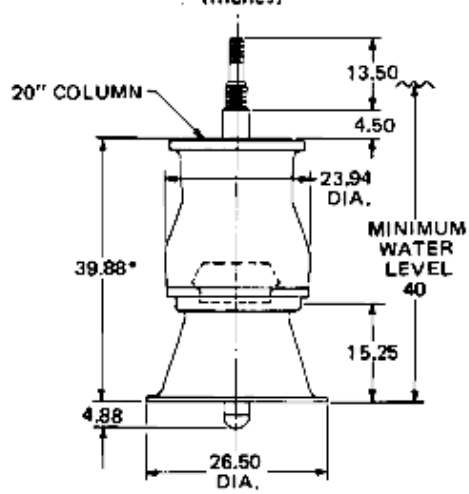

*Add 21.88 for each additional stage.

TECHNICAL DATA

DATA	VALUE
MAXIMUM OPERATING SPEED	1300 RPM
MAXIMUM NUMBER OF STAGES	9**
PUMP SHAFT DIAMETER	$3\frac{7}{16}$ IN.
IMPELLER EYE AREA	153.7 SQ. IN.
MAXIMUM SPHERE SIZE	1.68 IN.
K_t (THRUST FACTOR)	59 LBS./FT.
K_a (ROTOR WT. PER STAGE)	140 LBS.
BOWL WT. (FIRST STAGE)	1760 LBS.
BOWL WT. (EACH ADD'L. STAGE)	880 LBS.
ALLOWABLE SHAFT STRETCH	1.06 IN.**
WK^2 (FIRST STAGE)	51.08 LBS.-FT.^{2}
WK^2 (EACH ADD'L. STAGE)	49.83 LBS.-FT.^{2}
BOWL RING CLEARANCE	.015/.021 IN.

**These are nominal values. Refer to "Application and Reference Data" for information further limiting or extending these values.