VERTICAL TURBINE PUMPS
SINGLE STAGE PERFORMANCE

36HC 6920

705 RPM

IMPELLER YT5TA99

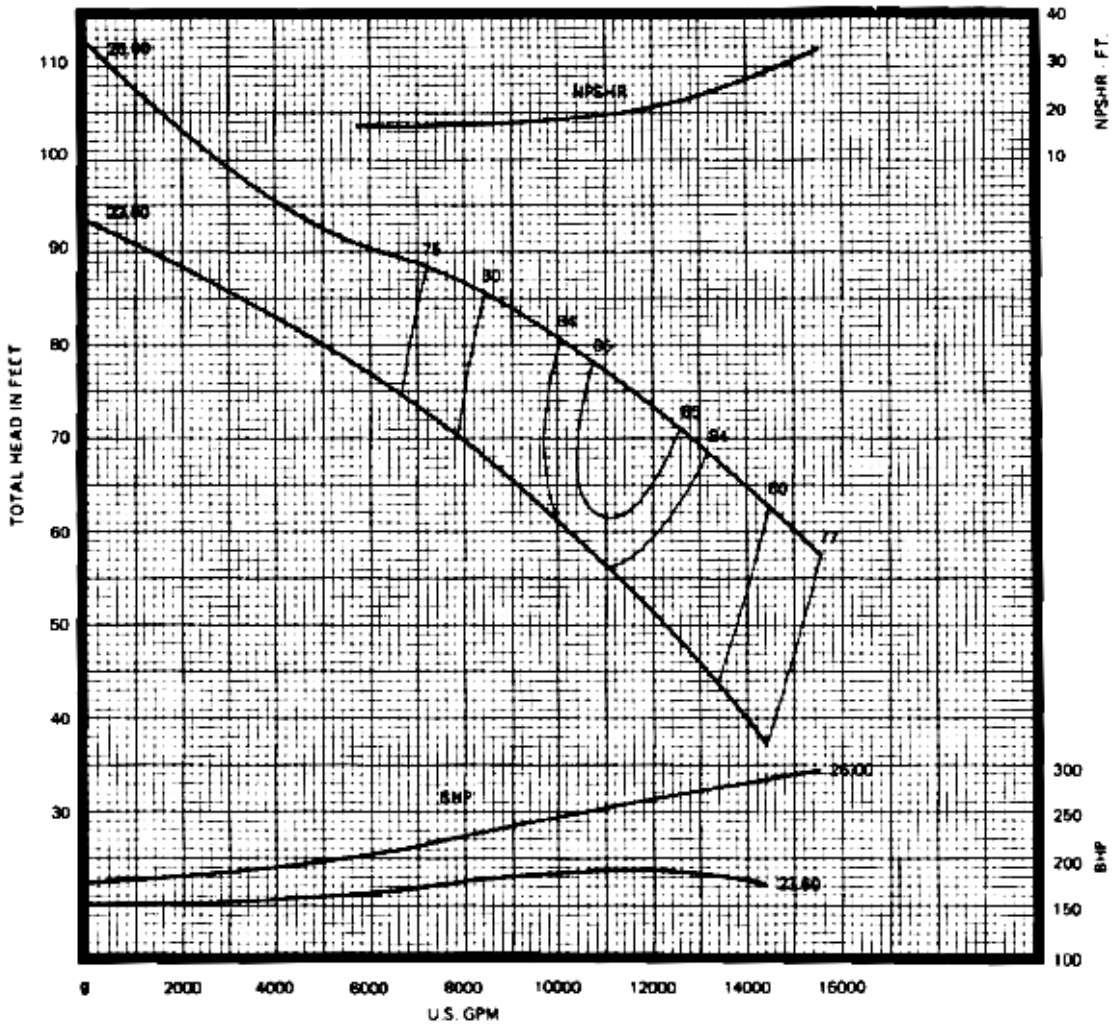

EFFICIENCY CORRECTIONS (1)

NUMBER OF STAGES	EFFICIENCY CHANGE
1	- 2.0 POINTS
2	- 1.0 POINTS
3	NO CHANGE
4	NO CHANGE
5	NO CHANGE
6	NO CHANGE

BOWL MATERIAL	EFFICIENCY CHANGE
CAST IRON	NO CHANGE
EPOXIED C.I.	NO CHANGE

IMPELLER MATERIAL	EFFICIENCY CHANGE
CAST IRON	- 1.0 POINTS
BRONZE	NO CHANGE
EPOXIED C.I.	NO CHANGE

(1) Refer to selection data for head correction.

DIMENSIONS (Inches)

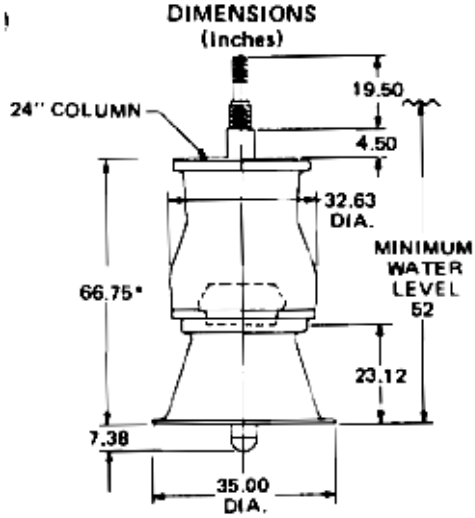

*Add 27.25 for each additional stage.

TECHNICAL DATA

DATA	VALUE
MAXIMUM OPERATING SPEED	900 RPM
MAXIMUM NUMBER OF STAGES	6**
PUMP SHAFT DIAMETER	5 IN.
IMPELLER EYE AREA	215.8 SQ.IN.
MAXIMUM SPHERE SIZE	2.13 IN.
K_1 (THRUST FACTOR)	87 LBS./FT.
K_2 (ROTOR WT. PER STAGE)	400 LBS./FT.
BOWL WT. (FIRST STAGE)	3800 LBS.
BOWL WT. (EACH ADD'L. STAGE)	2000 LBS.
ALLOWABLE SHAFT STRETCH	1.31 IN.
WK^2 (FIRST STAGE)	237.00 LBS.-FT.^{2}
WK^2 (EACH ADD'L. STAGE)	228.03 LBS.-FT.^{2}
BOWL RING CLEARANCE	.017/.023 IN.

**These are nominal values. Refer to "Application and Reference Data" for information further limiting or extending these values.