VERTICAL TURBINE PUMPS
SINGLE STAGE PERFORMANCE

12MC 7000

880 RPM

IMPELLER T5EC92

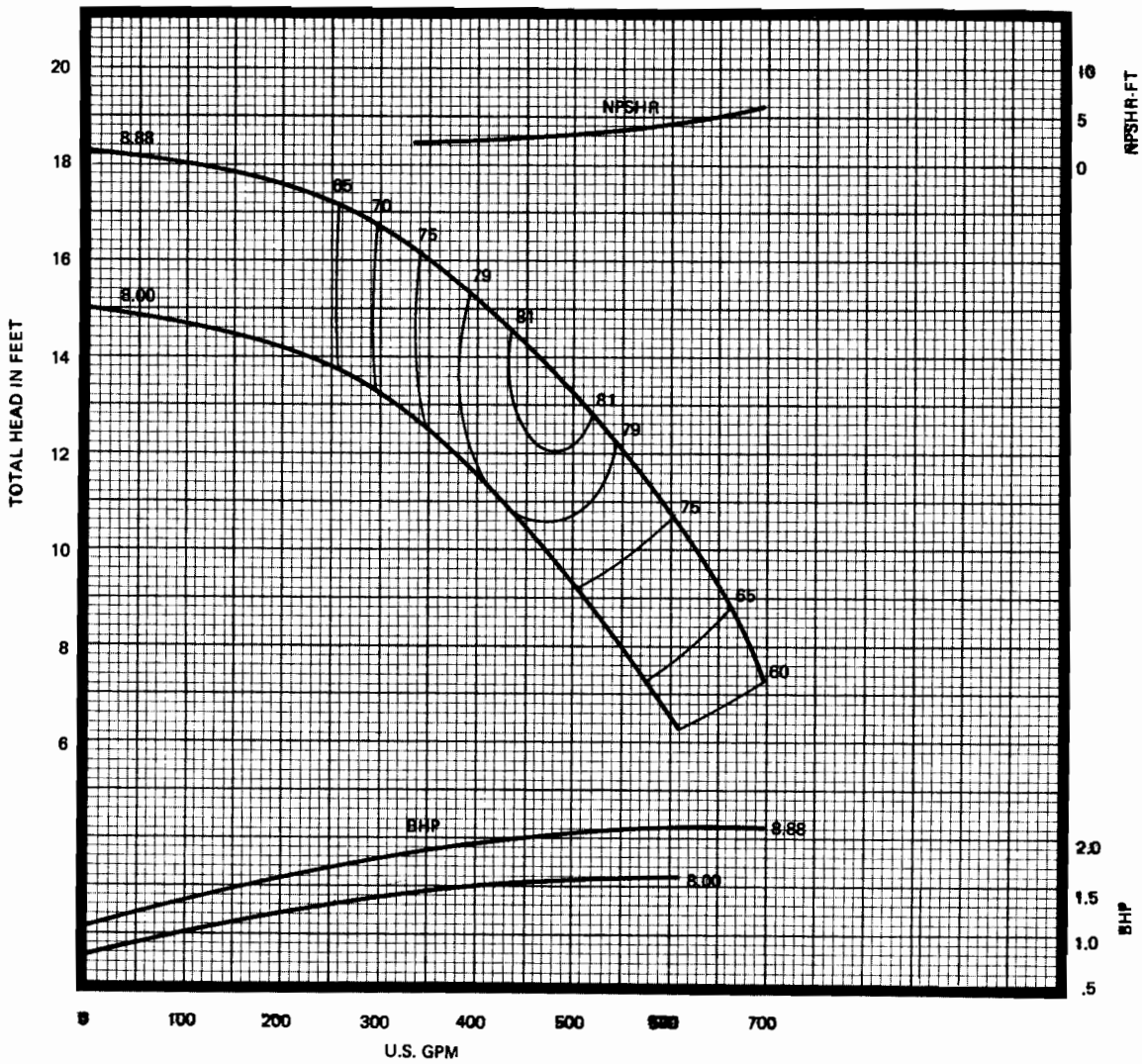

EFFICIENCY CORRECTIONS (1)

NUMBER OF STAGES	EFFICIENCY CHANGE
1	- 3.0 POINTS
2	- 2.0 POINTS
3	- 1.0 POINTS
4	- 0.5 POINTS
5	NO CHANGE
6 OR MORE	NO CHANGE

BOWL MATERIAL	EFFICIENCY CHANGE
CAST IRON	- 2.0 POINTS
EPOXIED C.I.	NO CHANGE

IMPELLER MATERIAL	EFFICIENCY CHANGE
CAST IRON	- 2.0 POINTS
BRONZE	NO CHANGE
EPOXIED C.I.	NO CHANGE

(1) Refer to "Application and Reference Data" for head correction.

DIMENSIONS (Inches)

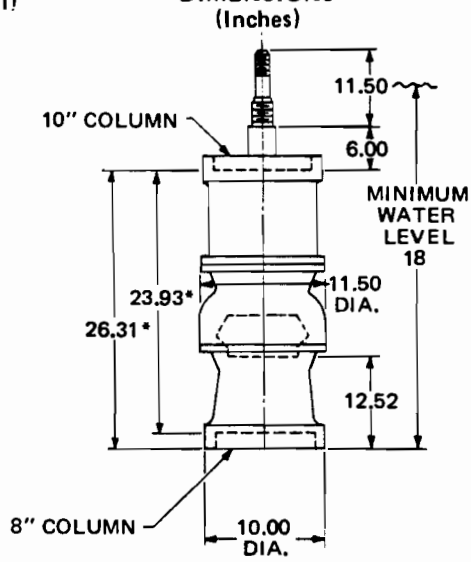

*Add 9.12 for each additional stage.

TECHNICAL DATA

DATA	VALUE
MAXIMUM OPERATING SPEED	2250 RPM
MAXIMUM NUMBER OF STAGES	23**
PUMP SHAFT DIAMETER	$1\frac{11}{16}$ IN.
IMPELLER EYE AREA	20.42 SQ. IN.
MAXIMUM SPHERE SIZE	.56 IN.
K_t (THRUST FACTOR)	8 LBS./FT.
K_a (ROTOR WT. PER STAGE)	12.60 LBS.
BOWL WT. (FIRST STAGE)	280 LBS.
BOWL WT. (EACH ADD'L. STAGE)	100 LBS.
ALLOWABLE SHAFT STRETCH	.88 IN.**
WK^2 (FIRST STAGE)	1.46 LBS.-FT.^{2}
WK^2 (EACH ADD'L. STAGE)	1.42 LBS.-FT.^{2}
BOWL RING CLEARANCE	.010/.015 IN.

**These are nominal values. Refer to "Application and Reference Data" for information further limiting or extending these values.