VERTICAL TURBINE PUMPS
SINGLE STAGE PERFORMANCE

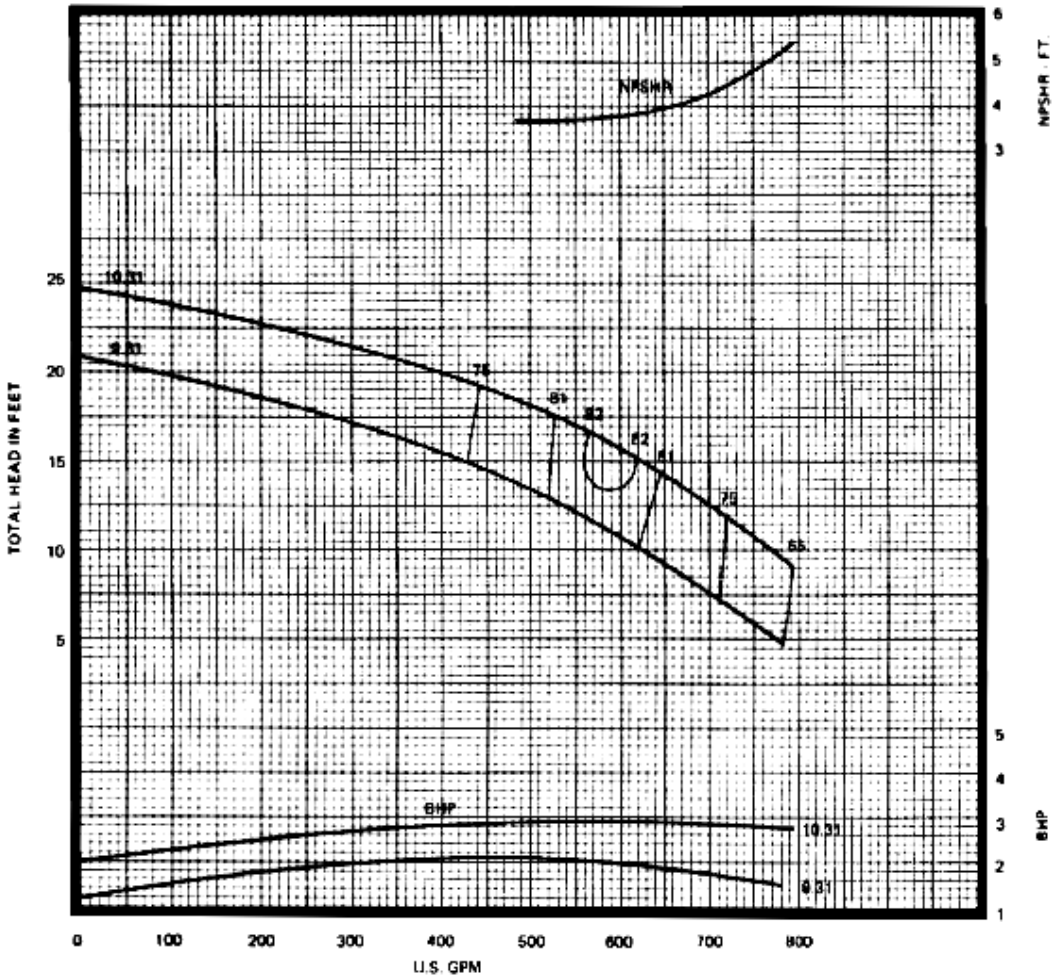

14MC 7000

880 RPM

IMPELLER T5FA92

EFFICIENCY CORRECTIONS (1)

NUMBER OF STAGES	EFFICIENCY CHANGE
1	- 4.0 POINTS
2	- 3.0 POINTS
3	- 2.0 POINTS
4	- 1.0 POINTS
5	NO CHANGE
6 OR MORE	NO CHANGE

BOWL MATERIAL	EFFICIENCY CHANGE
CAST IRON	- 2.0 POINTS
EPOXIED C.I.	NO CHANGE

IMPELLER MATERIAL	EFFICIENCY CHANGE
CAST IRON	- 2.0 POINTS
BRONZE	NO CHANGE
EPOXIED C.I.	NO CHANGE

(1) Refer to "Application and Reference Data" for head correction.

DIMENSIONS
(Inches)

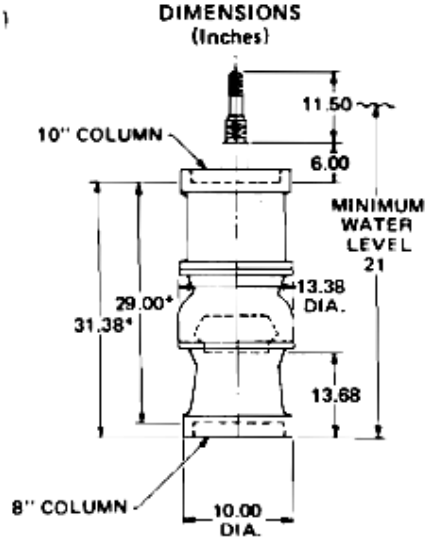

*Add 10.50 for each additional stage.

TECHNICAL DATA

DATA	VALUE
MAXIMUM OPERATING SPEED	2000 RPM
MAXIMUM NUMBER OF STAGES	19**
PUMP SHAFT DIAMETER	1 15/16 IN.
IMPELLER EYE AREA	28.72 SQ. IN.
MAXIMUM SPHERE SIZE	.68 IN.
K_t (THRUST FACTOR)	10.1 LBS./FT.
K_a (ROTOR WT. PER STAGE)	23.50 LBS.
BOWL WT. (FIRST STAGE)	420 LBS.
BOWL WT. (EACH ADD'L. STAGE)	150 LBS.
ALLOWABLE SHAFT STRETCH	.88 IN.**
WK^2 (FIRST STAGE)	3.62 LBS.-FT.^{2}
WK^2 (EACH ADD'L. STAGE)	3.54 LBS.-FT.^{2}
BOWL RING CLEARANCE	.006/.011 IN.

**These are nominal values. Refer to "Application and Reference Data" for information further limiting or extending these values.