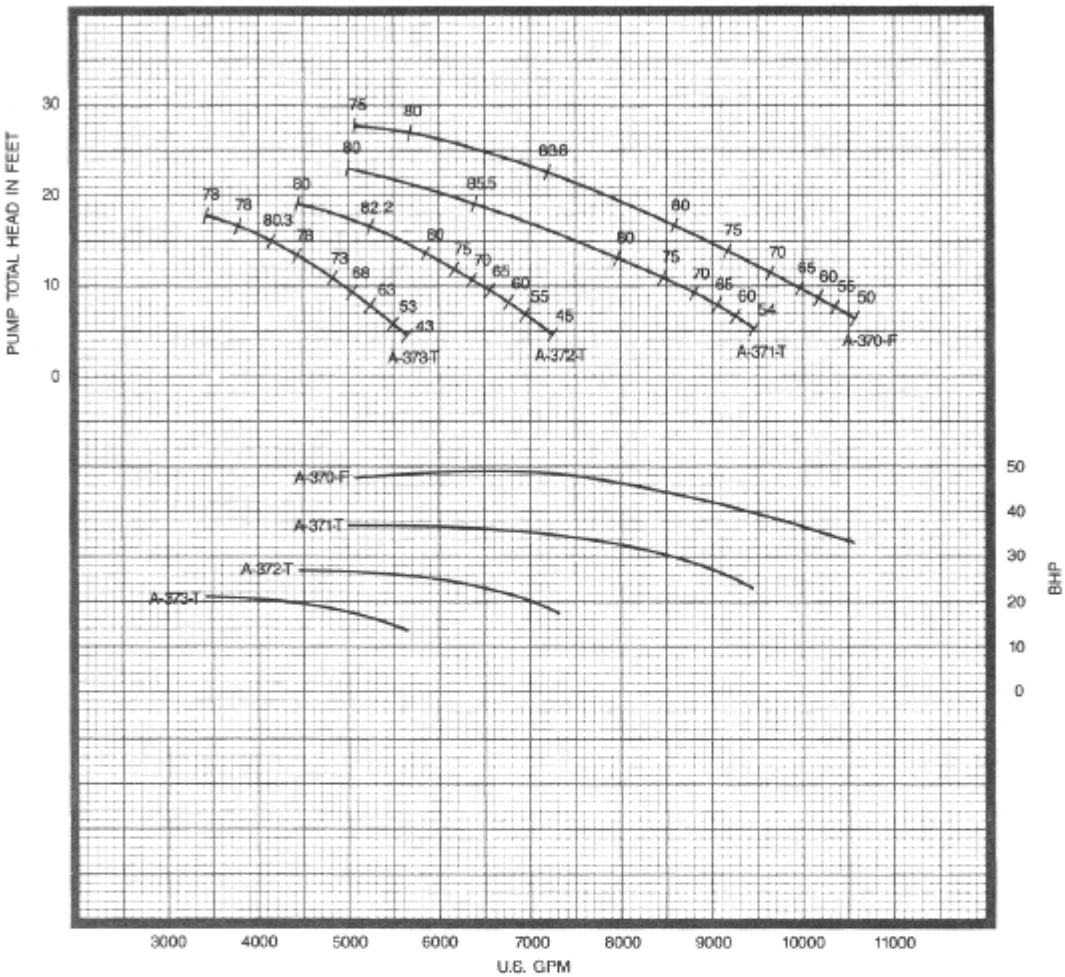

16″ 8312

880 RPM

1 STAGE

16″ COLUMN

16″ FABRICATED STEEL ELBOW

1-1/2″ LINESHAFT

2-1/2″ ENCLOSING TUBE

DATA	VALUE	
PUMP SHAFT DIAMETER	1.6875 IN.	
MAXIMUM SPHERE SIZE	2.63 IN.	
K_t (THRUST FACTOR)	62 LBS./FT.	
K_a (TOTAL ROTOR WEIGHT)	66 LBS.	
K_s (SETTING CONSTANT)	5.5 LBS./FT.	
WK^2	14 LBS.-FT.^{2}	
BOWL ASSEMBLY WEIGHT	625 LBS.	
EYE AREA: PROPELLER NO. A-372-T	124.0 SQ. IN.	3 VANE
PROPELLER NO. A-373-T	124.0 SQ. IN.	3 VANE
PROPELLER NO. A-370-F	124.0 SQ. IN.	4 VANE
PROPELLER NO. A-371-T	124.0 SQ. IN.	3 VANE
PROPELLER NO.		
PROPELLER NO.		

HYDRAULIC PERFORMANCE IS CONTINGENT ON FURNISHING THE PUMP WITH SPECIFIED AMOUNT OF CLEAR, FRESH, NON-AERATED WATER NOT TO EXCEED 85° F.

PUMP PERFORMANCE SHOWN IS BOWL ASSEMBLY WITH 10 FEET OF COLUMN INCLUDING A STANDARD ABOVE GROUND DISCHARGE ELBOW. ADDITIONAL COLUMN LOSSES SHOULD BE ADDED WHEN SETTINGS ARE DEEPER THAN 10 FEET AND/OR FOR OTHER DISCHARGE ARRANGEMENTS.

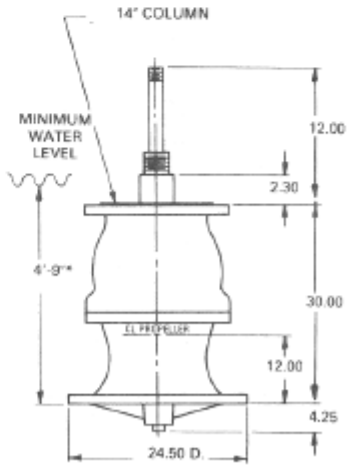

*This value is the minimum submergence required to prevent vortexing only. This value may need to be increased to provide adequate NPSHA.

16″ 8312

880 RPM

2 STAGE

16″ COLUMN

16″ FABRICATED STEEL ELBOW

1-11/16″ LINESHAFT

2-1/2″ ENCLOSING TUBE

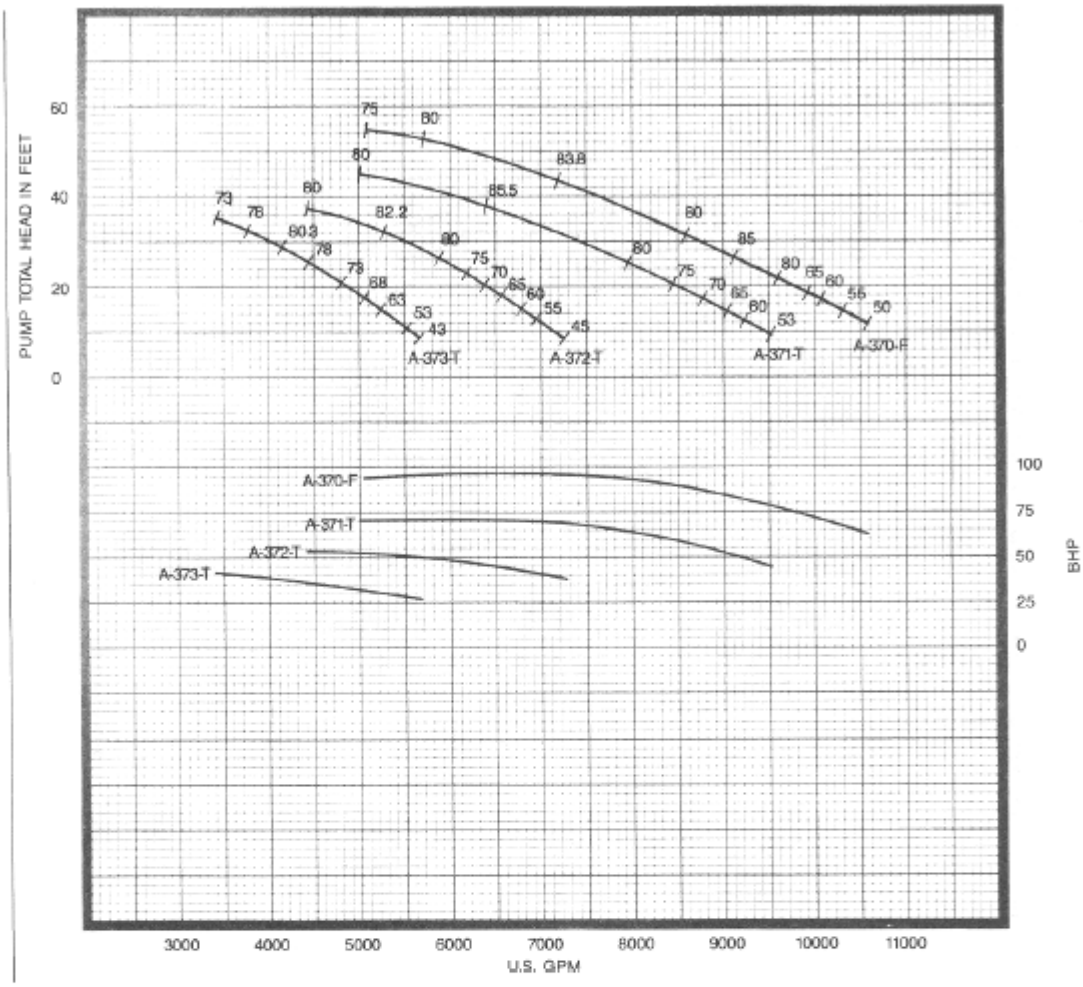

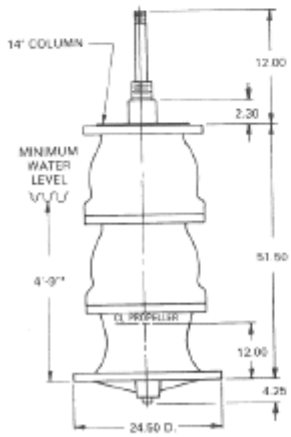

*This value is the minimum submergence required to prevent vortexing only. This value may need to be increased to provide adequate NPSHA.

DATA	VALUE	
PUMP SHAFT DIAMETER	1.6875 IN.	
MAXIMUM SPHERE SIZE	2.63 IN.	
K_t (THRUST FACTOR)	62 LBS./FT.	
K_a (TOTAL ROTOR WEIGHT)	132 LBS.	
K_s (SETTING CONSTANT)	7.6 LBS./FT.	
WK^2	28 LBS.-FT.^{2}	
BOWL ASSEMBLY WEIGHT	1025 LBS.	
EYE AREA: PROPELLER NO. A-372-T	124.0 SQ. IN.	3 VANE
PROPELLER NO. A-373-T	124.0 SQ. IN.	3 VANE
PROPELLER NO. A-370-F	124.0 SQ. IN.	4 VANE
PROPELLER NO. A-371-T	124.0 SQ. IN.	3 VANE
PROPELLER NO.		
PROPELLER NO.		

HYDRAULIC PERFORMANCE IS CONTINGENT ON FURNISHING THE PUMP WITH SPECIFIED AMOUNT OF CLEAR, FRESH, NON-AERATED WATER NOT TO EXCEED 85° F.

PUMP PERFORMANCE SHOWN IS BOWL ASSEMBLY WITH 10 FEET OF COLUMN INCLUDING A STANDARD ABOVE GROUND DISCHARGE ELBOW. ADDITIONAL COLUMN LOSSES SHOULD BE ADDED WHEN SETTINGS ARE DEEPER THAN 10 FEET AND/OR FOR OTHER DISCHARGE ARRANGEMENTS.

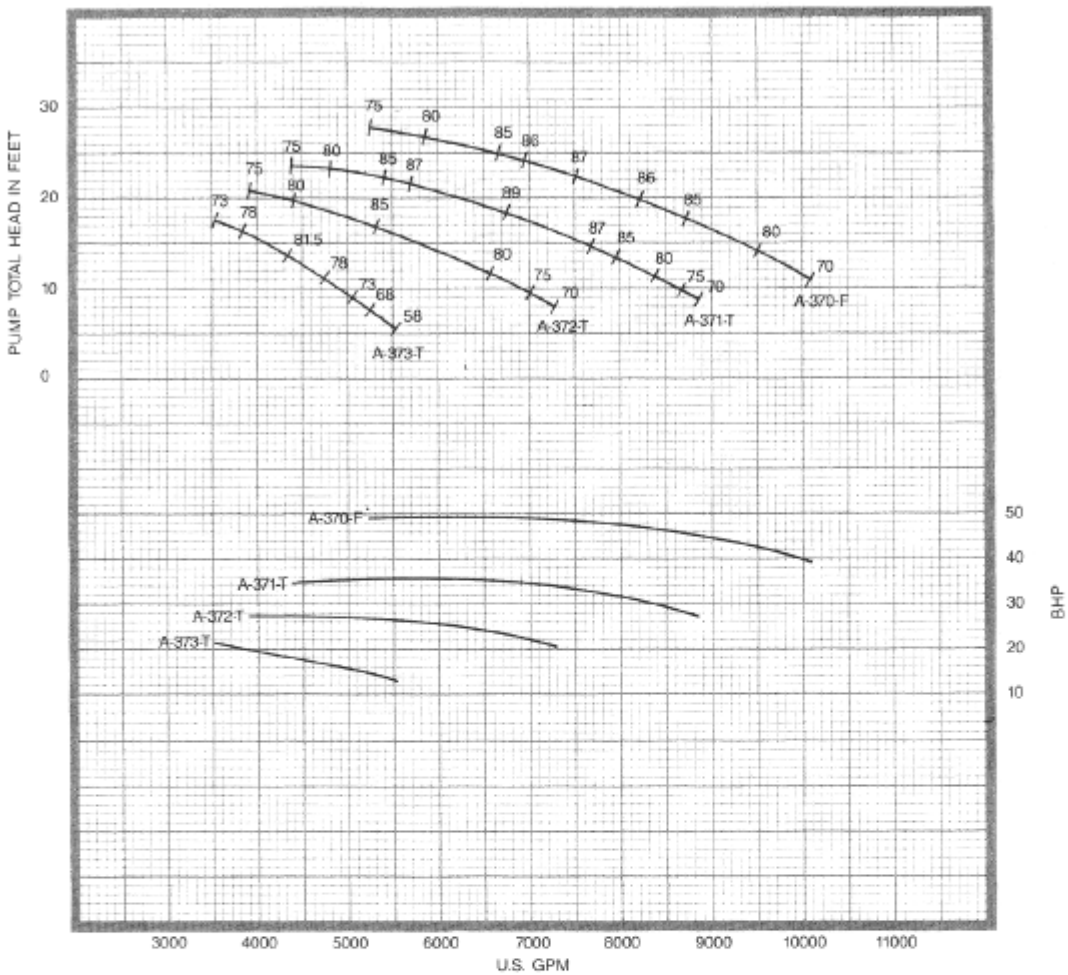

16″ 8312

880 RPM

1 STAGE

20″ COLUMN

20″ FABRICATED STEEL ELBOW

1-1/2″ LINESHAFT

2-1/2″ ENCLOSING TUBE

DATA	VALUE	
PUMP SHAFT DIAMETER	1.6875 IN.	
MAXIMUM SPHERE SIZE	2.63 IN.	
K_t (THRUST FACTOR)	62 LBS./FT.	
K_a (TOTAL ROTOR WEIGHT)	66 LBS.	
K_s (SETTING CONSTANT)	5.5 LBS./FT.	
WK^2	14 LBS.-FT.^{2}	
BOWL ASSEMBLY WEIGHT	625 LBS.	
EYE AREA: PROPELLER NO. A-372-T	124.0 SQ. IN.	3 VANE
PROPELLER NO. A-373-T	124.0 SQ. IN.	3 VANE
PROPELLER NO. A-370-F	124.0 SQ. IN.	4 VANE
PROPELLER NO. A-371-T	124.0 SQ. IN.	3 VANE
PROPELLER NO.		
PROPELLER NO.		

HYDRAULIC PERFORMANCE IS CONTINGENT ON FURNISHING THE PUMP WITH SPECIFIED AMOUNT OF CLEAR, FRESH, NON-AERATED WATER NOT TO EXCEED 85° F.

PUMP PERFORMANCE SHOWN IS BOWL ASSEMBLY WITH 10 FEET OF COLUMN INCLUDING A STANDARD ABOVE GROUND DISCHARGE ELBOW. ADDITIONAL COLUMN LOSSES SHOULD BE ADDED WHEN SETTINGS ARE DEEPER THAN 10 FEET AND/OR FOR OTHER DISCHARGE ARRANGEMENTS.

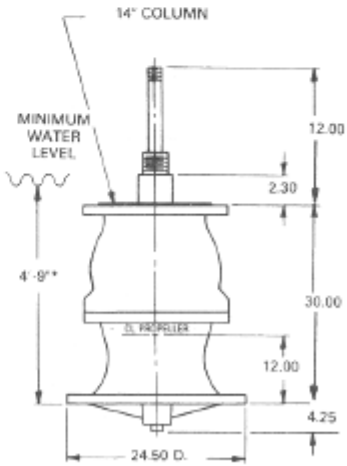

*This value is the minimum submergence required to prevent vortexing only. This value may need to be increased to provide adequate NPSHA.

16″ 8312

880 RPM

2 STAGE

20' COLUMN

20' FABRICATED STEEL ELBOW

1-11/16" LINESHAFT

2-1/2" ENCLOSING TUBE

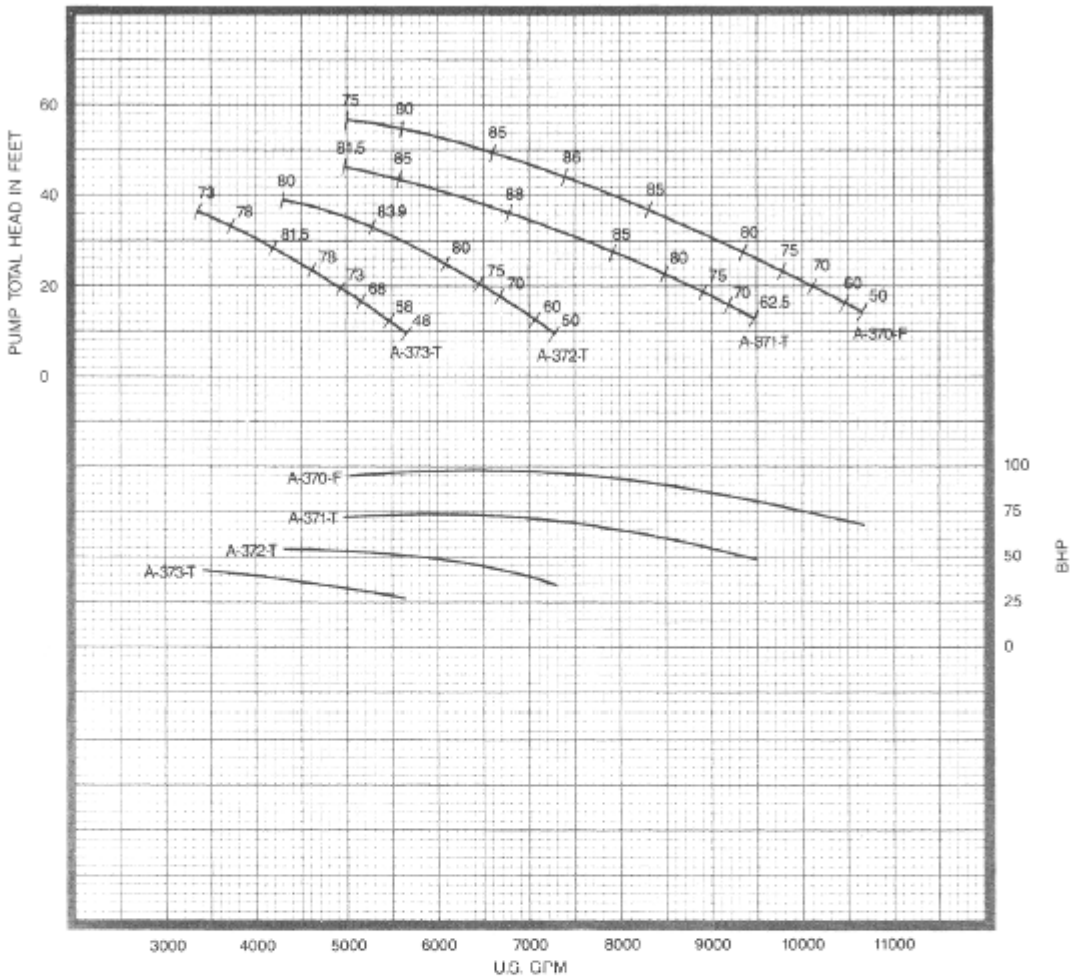

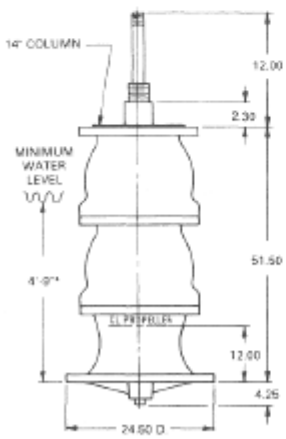

*This value is the minimum submergence required to prevent vortexing only. This value may need to be increased to provide adequate NPSHA.

DATA	VALUE	
PUMP SHAFT DIAMETER	1.6875 IN.	
MAXIMUM SPHERE SIZE	2.63 IN.	
Kt (THRUST FACTOR)	62 LBS./FT.	
Ka (TOTAL ROTOR WEIGHT)	132 LBS.	
Ks (SETTING CONSTANT)	7.6 LBS./FT.	
WK^2	28 LBS.-FT.^{2}	
BOWL ASSEMBLY WEIGHT	1025 LBS.	
EYE AREA: PROPELLER NO. A-372-T	124.0 SQ. IN.	3 VANE
PROPELLER NO. A-373-T	124.0 SQ. IN.	3 VANE
PROPELLER NO. A-370-F	124.0 SQ. IN.	4 VANE
PROPELLER NO. A-371-T	124.0 SQ. IN.	3 VANE
PROPELLER NO.		
PROPELLER NO.		

HYDRAULIC PERFORMANCE IS CONTINGENT ON FURNISHING THE PUMP WITH SPECIFIED AMOUNT OF CLEAR, FRESH, NON-AERATED WATER NOT TO EXCEED 85° F.

PUMP PERFORMANCE SHOWN IS BOWL ASSEMBLY WITH 10 FEET OF COLUMN INCLUDING A STANDARD ABOVE GROUND DISCHARGE ELBOW. ADDITIONAL COLUMN LOSSES SHOULD BE ADDED WHEN SETTINGS ARE DEEPER THAN 10 FEET AND/OR FOR OTHER DISCHARGE ARRANGEMENTS.