VERTICAL TURBINE PUMPS
SINGLE STAGE PERFORMANCE

16H 6920

880 RPM

IMPELLER T5H899H

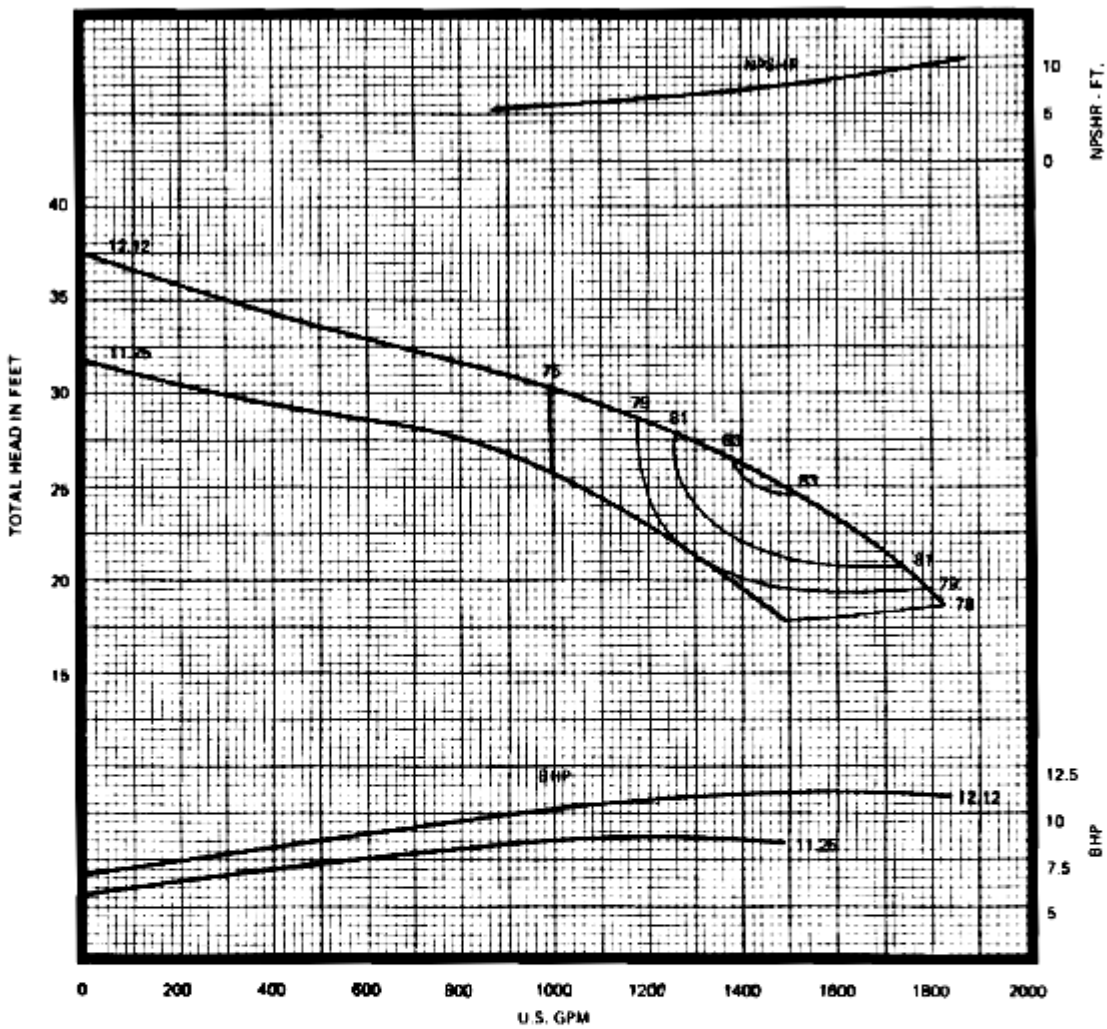

EFFICIENCY CORRECTIONS (1)

NUMBER OF STAGES	EFFICIENCY CHANGE
1	-2.0 POINTS
2	-1.0 POINTS
3	NO CHANGE
4	NO CHANGE
5	NO CHANGE
6 OR MORE	NO CHANGE

BOWL MATERIAL	EFFICIENCY CHANGE
CAST IRON	-1.0 POINTS
EPOXIED C.I.	NO CHANGE

IMPELLER MATERIAL	EFFICIENCY CHANGE
CAST IRON	-1.0 POINTS
BRONZE	NO CHANGE
EPOXIED C.I.	NO CHANGE

(1) Refer to "Application and Reference Data" for head correction.

DIMENSIONS
(Inches)

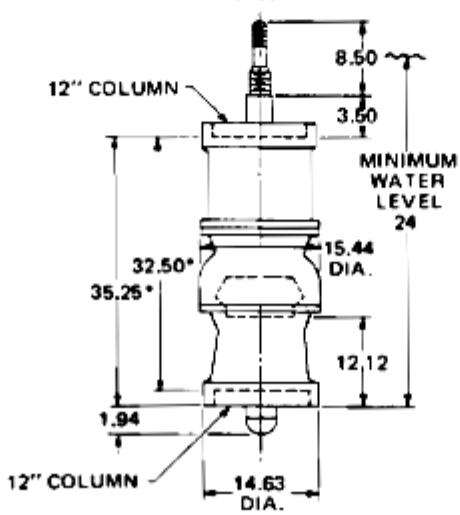

*Add 12.75 for each additional stage.

TECHNICAL DATA

DATA	VALUE
MAXIMUM OPERATING SPEED	2250 RPM
MAXIMUM NUMBER OF STAGES	16**
PUMP SHAFT DIAMETER	$2\frac{3}{16}$ IN.
IMPELLER EYE AREA	47.70 SQ. IN.
MAXIMUM SPHERE SIZE	1.00 IN.
K_1 (THRUST FACTOR)	17 LBS./FT.
K_a (ROTOR WT. PER STAGE)	37.30 LBS.
BOWL WT. (FIRST STAGE)	600 LBS.
BOWL WT. (EACH ADD'L. STAGE)	300 LBS.
ALLOWABLE SHAFT STRETCH	.81 IN.**
WK^2 (FIRST STAGE)	7.26 LBS.-FT.^{2}
WK^2 (EACH ADD'L. STAGE)	7.10 LBS.-FT.^{2}
BOWL RING CLEARANCE	.012/.017 IN.

**These are nominal values. Refer to "Application and Reference Data" for information further limiting or extending these values.