FLOWSERVE

12QKH

01-JUNE-2000
NEW SHEET
IMPELLER CURVES

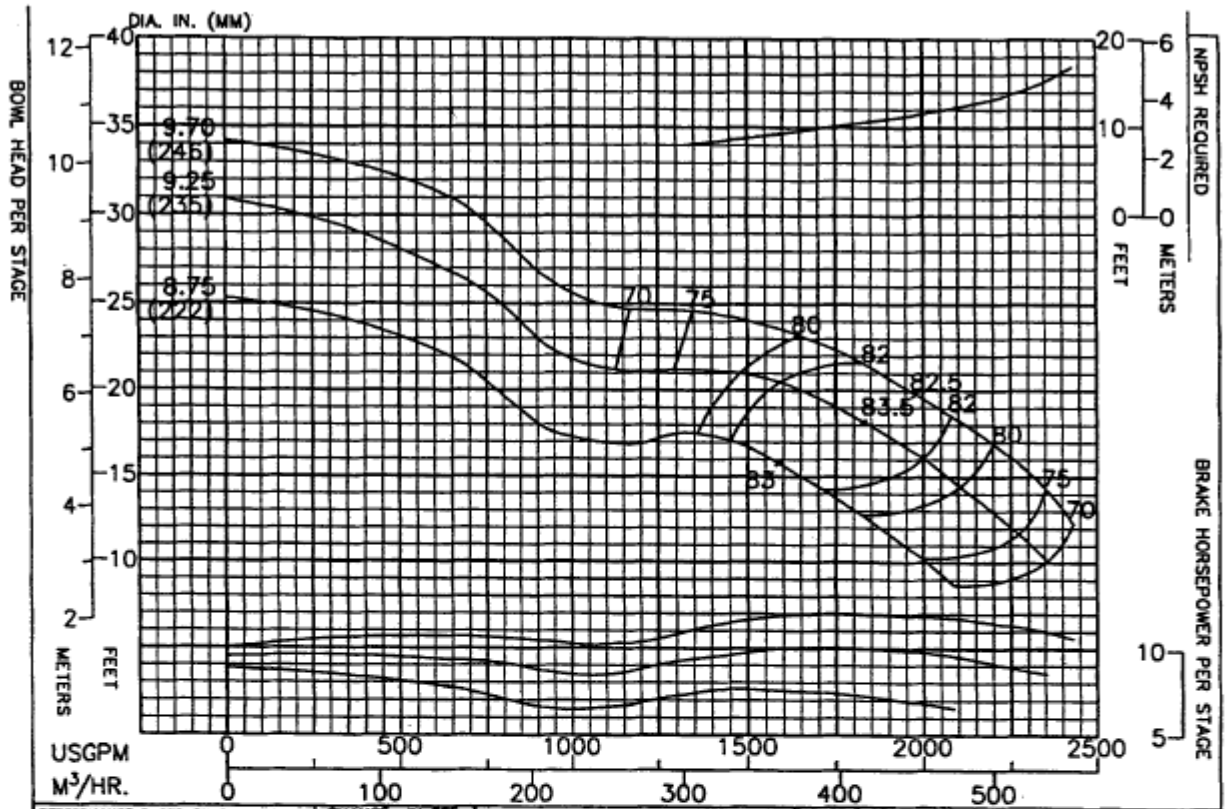

PERFORMANCE BASED ON PUMPING CLEAR WATER BELOW 85°F. WITH LISTED MATLS. COLUMN LOSSES NOT INCLUDED.	CHANGE IN EFF. STAGES	POINTS
	1	-3
BOWL – CAST IRON – LINED	2	-1
IMPELLER – BRONZE	3	0

THRUST FACTORS AT BEP			RPM	PUMP
IMPELLER	LBS/FT	KG/M	1180	12QKH
STANDARD	14.0	20.9	ENCLOSED IMPELLER	CURVE NO.
EYE AREA–37.8 SQ. IN.			N_s = 5590	EC–1848

Column	Nom. Size	Max. GPM	"A" Flanged	"B" Threaded
Optional				
Standard	10"	3000	NA	11.75"
Optional				
RATINGS				
Max. Pressure = 487 psi based on Class 30 Iron bowls				
Impeller and Shaft Weight = 32.0 pounds per stage				
Pump Shaft	Diameter = 1.94 inches			
	Max. HP. = 293 with 416 SS Pump Shaft			
Line Shaft Size	1.25	1.50	1.69	1.94
Line Shaft H.P.	77	133	192	293

Additional Data	
Max. Operating Speed.	1800
Max. No. of Stages	12
Max. Sphere Size	1.62
End Play	.90
WR 2 Per Stage	1.62
Bowl Ring Clearance	.004 - .006
Impeller Running Clearance (3)	.125

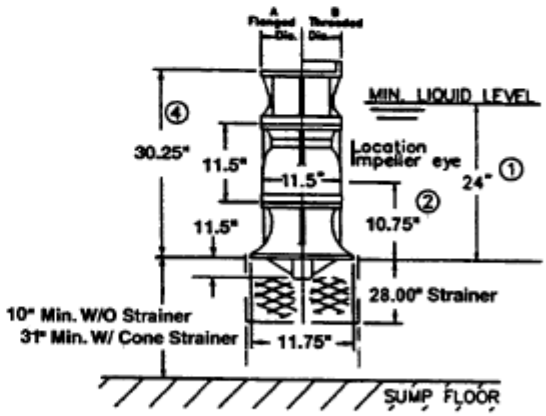

(1) Minimum submergence required to prevent vortex formation. The submergence needed to provide adequate NPSH to the first stage. Impeller may be greater or less than shown. The larger of the two values must be used to determine actual minimum allowable submergence.

(2) Location of eye of first stage impeller. Used to calculate NPSH. This is also the minimum priming submergence. (See note 1).

(3) Vertical Impeller to Bowl running clearance after shaft stretch.

(4) For Suction Case dimensions see sheets 20.26 and 20.28.

(5) Suction Bell **NOT** available on this model of pump.

N/A–Not Available

All Specifications Subject to Change Without Notice.