01-JUNE-2000
NEW SHEET

IMPELLER CURVES

14M160

FLOWSERVE

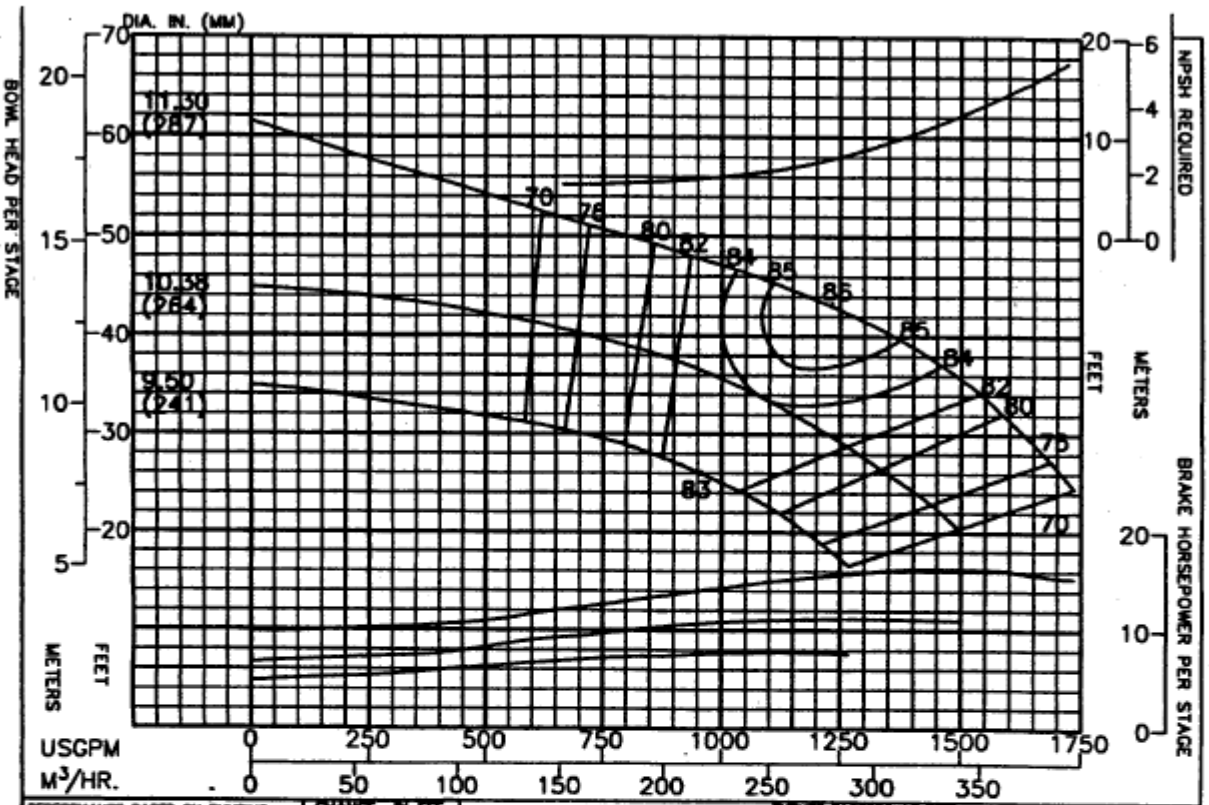

PERFORMANCE BASED ON PUMPING CLEAR WATER BELOW 85°F. WITH LISTED MAT'LS. COLUMN LOSSES NOT INCLUDED.	CHANGE STAGES	IN EFF. POINTS	THRUST FACTORS AT BEP: IMPELLER	LBS/FT	KG/M	RPM 1175	PUMP 14M160
BOWL - CAST IRON - LINED	1	-4	STANDARD	8.41	12.5	ENCLOSED IMPELLER	CURVE NO.
IMPELLER - BRONZE	2	-2				N_s = 2450	EC-2374
	3	0	EYE AREA- 25.3 SQ. IN.				

Column	Nom. Size	Max. GPM	"A" Flanged	"B" Threaded
Optional	8"	1500	11.50"	11.50"
Standard	10"	3000	15.00"	11.62"
Optional	12"	5000	16.00"	13.75"
RATINGS				
Max. Pressure = 392 psi based on Class 30 Iron bowls				
Impeller and Shaft Weight = 37.0 pounds per stage				
Pump Shaft	Diameter = 2.19 inches			
	Max. HP. = 383 with 416 SS Pump Shaft			
Line Shaft Size	1.50	1.69	1.94	2.19
Line Shaft H.P.	133	192	293	383

Additional Data	
Max. Operating Speed.	2100
Max. No. of Stages	10
Max. Sphere Size	.50
End Play	.75
WR 2 Per Stage	2.61
Bowl Ring Clearance	.004 - .006
Impeller Running Clearance (3)	.250

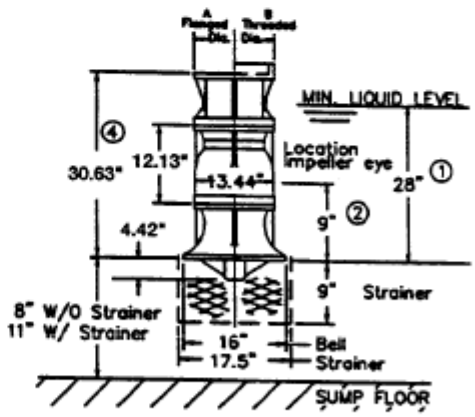

(1) Minimum submergence required to prevent vortex formation. The submergence needed to provide adequate NPSH to the first stage. Impeller may be greater or less than shown. The larger of the two values must be used to determine actual minimum allowable submergence.

(2) Location of eye of first stage impeller. Used to calculate NPSH. This is also the minimum priming submergence. (See note 1).

(3) Vertical Impeller to Bowl running clearance after shaft stretch.

(4) For Suction Case dimensions see sheets 20.26 and 20.29.

All Specifications Subject to Change Without Notice.