FLOWSERVE

20ENL/20NKL

01-JUNE-2000
NEW SHEET
IMPELLER CURVES

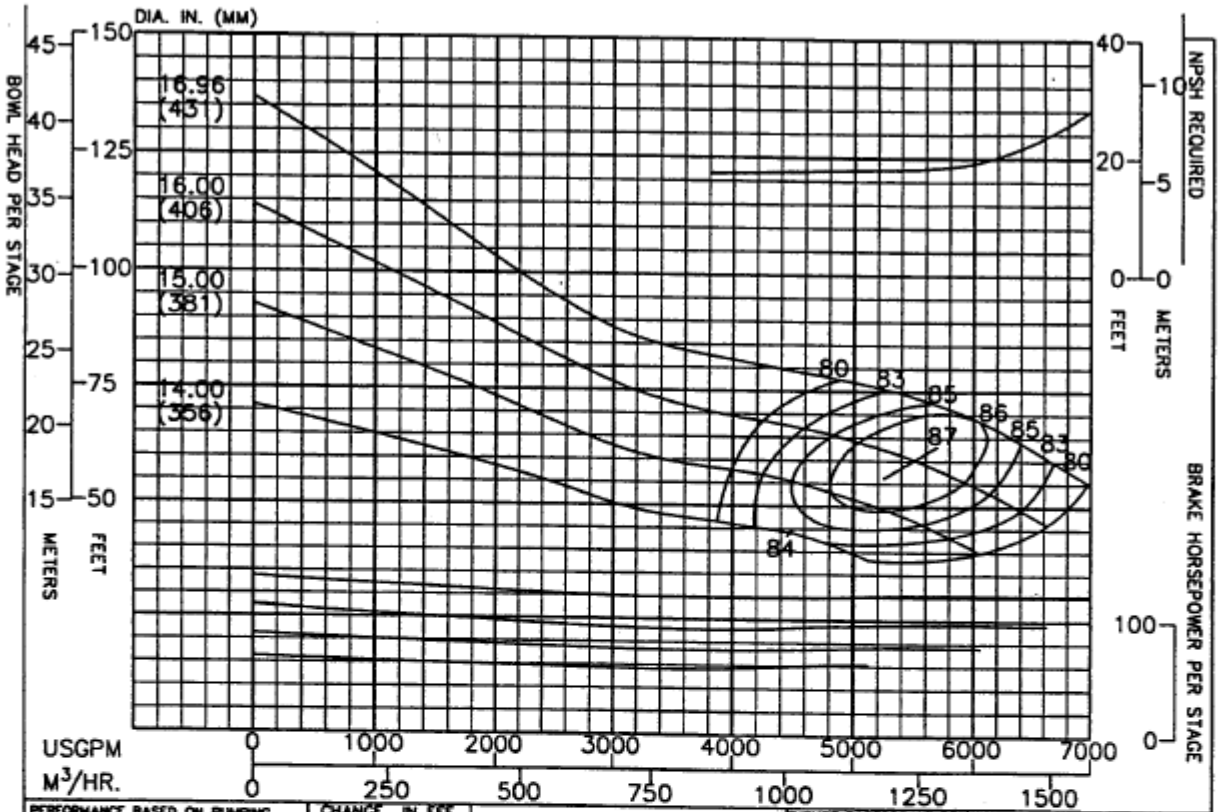

PERFORMANCE BASED ON PUMPING CLEAR WATER BELOW 85°F. WITH LISTED MATLS. COLUMN LOSSES NOT INCLUDED.	CHANGE IN EFF. STAGES	POINTS
	1	0
	2	0
BOWL – CAST IRON – LINED		
IMPELLER – BRONZE		

THRUST FACTORS AT BEP			RPM	PUMP
IMPELLER	LBS/FT	KG/M	1180	20ENL
STANDARD	31.0	46.2	ENCLOSED IMPELLER	CURVE NO.
EYE AREA–87.8 SQ. IN.			N_s = 3630	EC–1397

Column	Nom. Size	Max. GPM	"A" Flanged	"B" Threaded
Optional	12"	5000	16.00"	16.00"
Standard	14"	7000	17.25"	17.25"
Optional	16"	9000	19.50"	–
RATINGS				
Max. Pressure = 480 psi based on Class 30 Iron bowls				
Impeller and Shaft Weight = 141.0 pounds per stage				
Pump Shaft	Diameter = 2.44 inches			
	Max. HP. = 537 with 416 SS Pump Shaft			
Line Shaft Size	1.69	1.94	2.19	2.44
Line Shaft H.P.	192	293	383	537

Additional Data	
Max. Operating Speed.	1500
Max. No. of Stages	10
Max. Sphere Size	2.62
End Play	.78
WR 2 Per Stage	18.70
Bowl Ring Clearance	.004 - .006
Impeller Running Clearance (3)	.125

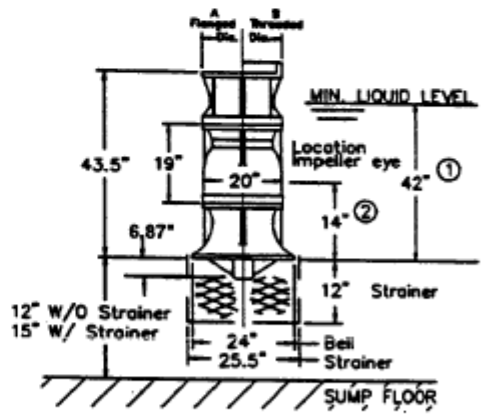

(1) Minimum submergence required to prevent vortex formation. The submergence needed to provide adequate NPSH to the first stage. Impeller may be greater or less than shown. The larger of the two values must be used to determine actual minimum allowable submergence.

(2) Location of eye of first stage impeller. Used to calculate NPSH. This is also the minimum priming submergence. (See note 1).

(3) Vertical Impeller to Bowl running clearance after shaft stretch.