FLOWSERVE

10EJH/10JKH

01-JUNE-2000
NEW SHEET
IMPELLER CURVES

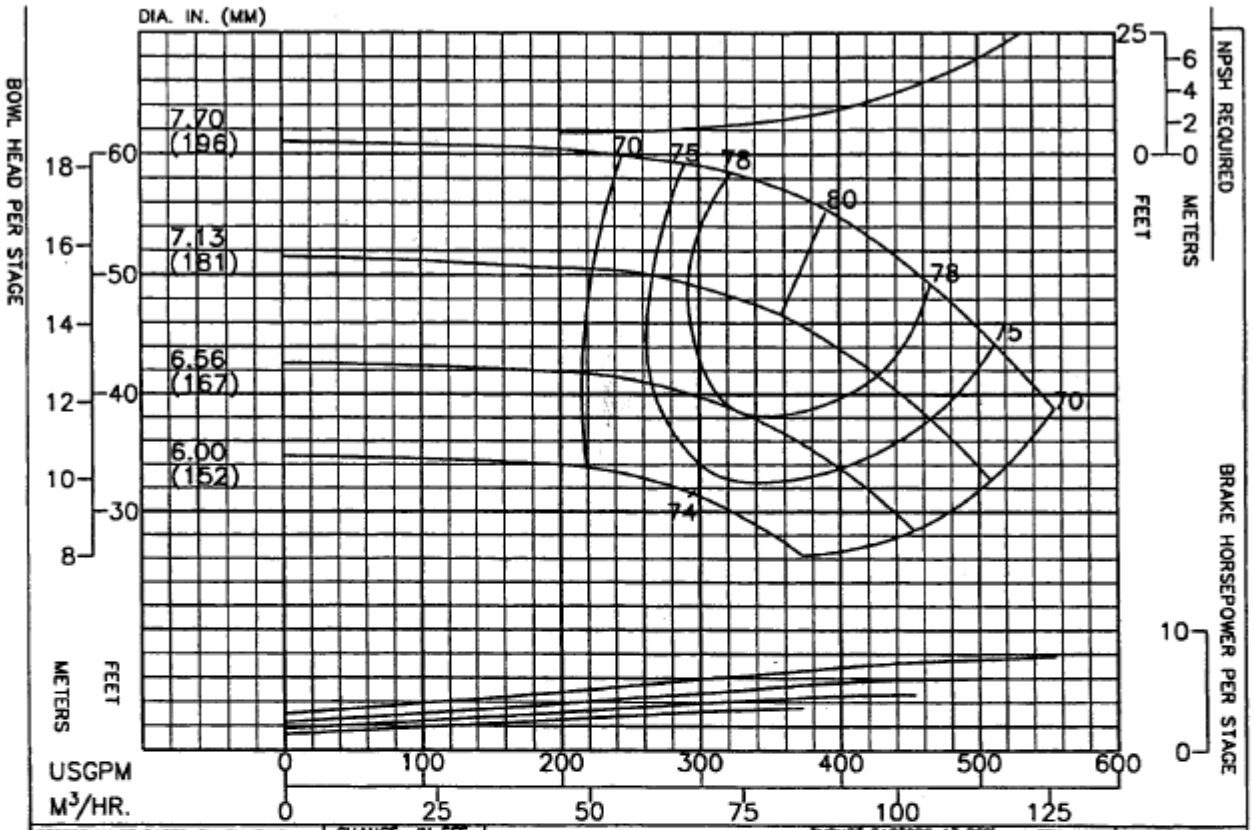

PERFORMANCE BASED ON PUMPING CLEAR WATER BELOW 85°F. WITH LISTED MAT'LS. COLUMN LOSSES NOT INCLUDED.	CHANGE STAGES	IN EFF. POINTS
BOWL – CAST IRON – LINED	1	-3
IMPELLER – BRONZE	2	-2
	3	-1
	4	0

THRUST FACTORS AT BEP			RPM	PUMP
IMPELLER	LBS/FT	KG/M	1770	10EJH
STANDARD	3.1	4.6	ENCLOSED IMPELLER	CURVE NO.
EYE AREA–8.64 SQ. IN.			N_s = 1720	EC–1476

Column	Nom. Size	Max. GPM	"A" Flanged	"B" Threaded
Optional				
Standard	6"	600	9.50"	9.50"
Optional	8"	1500	11.38"	9.63"
RATINGS				
Max. Pressure = 566 psi based on Class 30 Iron bowls				
Impeller and Shaft Weight = 16.0 pounds per stage				
Pump Shaft	Diameter = 1.50 inches			
	Max. HP. = 200 with 416 SS Pump Shaft			
Line Shaft Size	1.00	1.25	1.50	
Line Shaft H.P.	57	115	200	

Additional Data	
Max. Operating Speed.	3600
Max. No. of Stages	17
Max. Sphere Size	.64
End Play	.53
WR 2 Per Stage	.427
Bowl Ring Clearance	.004 - .006
Impeller Running Clearance (3)	0.125

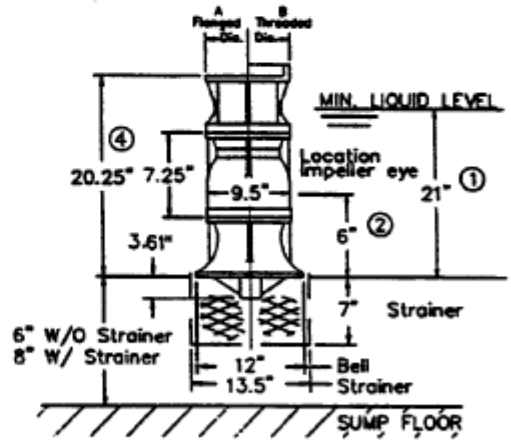

(1) Minimum submergence required to prevent vortex formation. The submergence needed to provide adequate NPSH to the first stage. Impeller may be greater or less than shown. The larger of the two values must be used to determine actual minimum allowable submergence.

(2) Location of eye of first stage impeller. Used to calculate NPSH. This is also the minimum priming submergence. (See note 1).

(3) Vertical Impeller to Bowl running clearance after shaft stretch.

(4) For Suction Case dimensions see sheets 20.25 and 20.27.

All Specifications Subject to Change Without Notice.

FLOWSERVE