FLOWSERVE

10QKH

01-JUNE-2000
NEW SHEET
IMPELLER CURVES

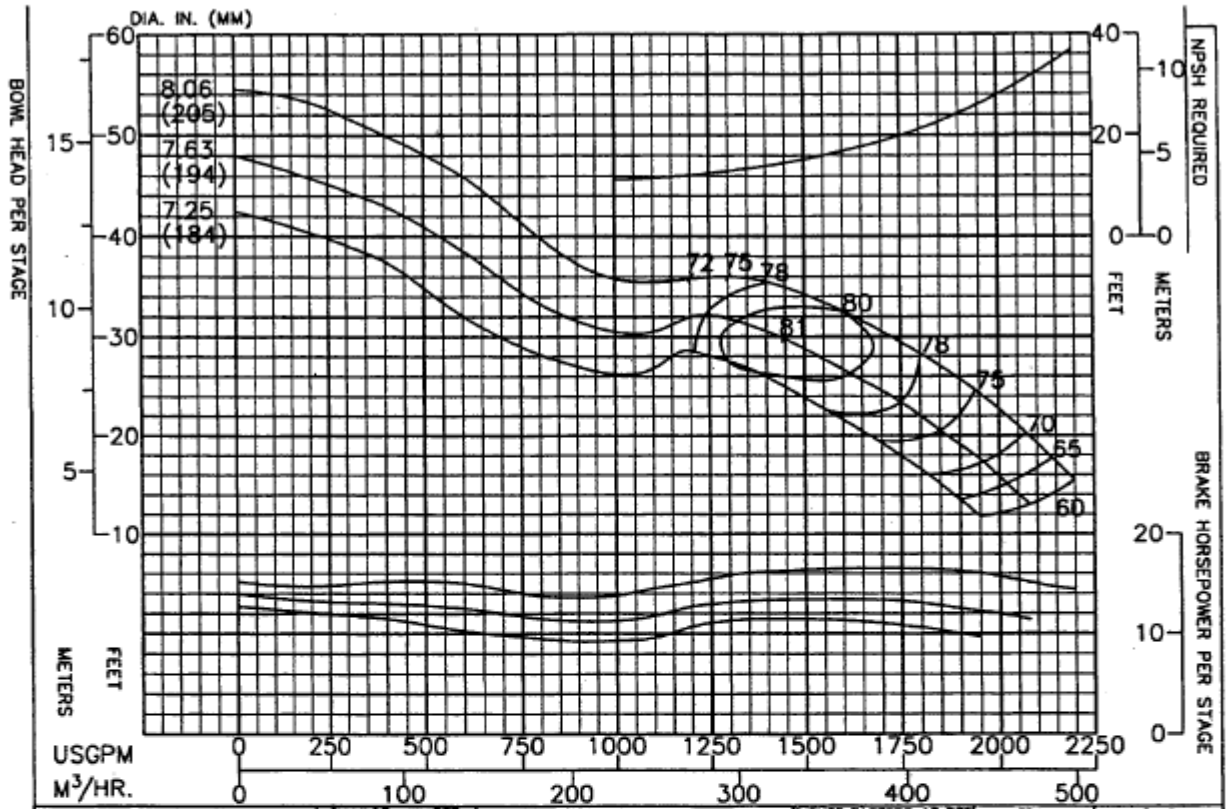

PERFORMANCE BASED ON PUMPING CLEAR WATER BELOW 85°F. WITH LISTED MATLS. COLUMN LOSSES NOT INCLUDED.	CHANGE IN EFF. STAGES	POINTS
BOWL – CAST IRON – LINED	1	-3
IMPELLER – BRONZE	2	-2
	3	-1
	4	0

THRUST FACTORS AT BEP		
IMPELLER	LBS/FT	KG/M
STANDARD	11.0	16.4
EYE AREA–26.0 SQ. IN.		

RPM	PUMP
1770	10QKH
ENCLOSED IMPELLER	CURVE NO.
N_s = 5270	EC–2143

Column	Nom. Size	Max. GPM	"A" Flanged	"B" Threaded
Optional				
Standard	8"	1500	11.38"	9.63"
Optional				
RATINGS				
Max. Pressure = 426 psi based on Class 30 Iron bowls .				
Impeller and Shaft Weight = 18.0 pounds per stage				
Pump Shaft	Diameter = 1.69 inches			
	Max. HP. = 288 with 416 SS Pump Shaft			
Line Shaft Size	1.00	1.25	1.50	1.69
Line Shaft H.P.	57	115	200	288

Additional Data	
Max. Operating Speed.	2100
Max. No. of Stages	15
Max. Sphere Size	1.35
End Play	.73
WR 2 Per Stage	.758
Bowl Ring Clearance	.004 - .006
Impeller Running Clearance (3)	0.125

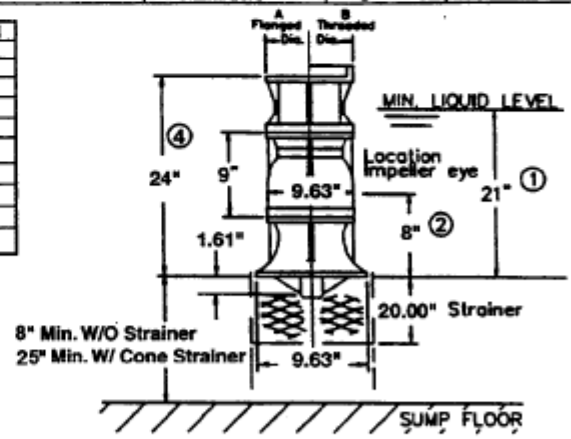

(1) Minimum submergence required to prevent vortex formation. The submergence needed to provide adequate NPSH to the first stage. Impeller may be greater or less than shown. The larger of the two values must be used to determine actual minimum allowable submergence.

(2) Location of eye of first stage impeller. Used to calculate NPSH. This is also the minimum priming submergence. (See note 1).

(3) Vertical Impeller to Bowl running clearance after shaft stretch.

(4) For Suction Case dimensions see sheets 20.25 and 20.27.

(5) Suction Bell **NOT** available on this model of pump.

All Specifications Subject to Change Without Notice.

FLOWSERVE