FLOWSERVE

12BH

01-JUNE-2000
NEW SHEET
IMPELLER CURVES

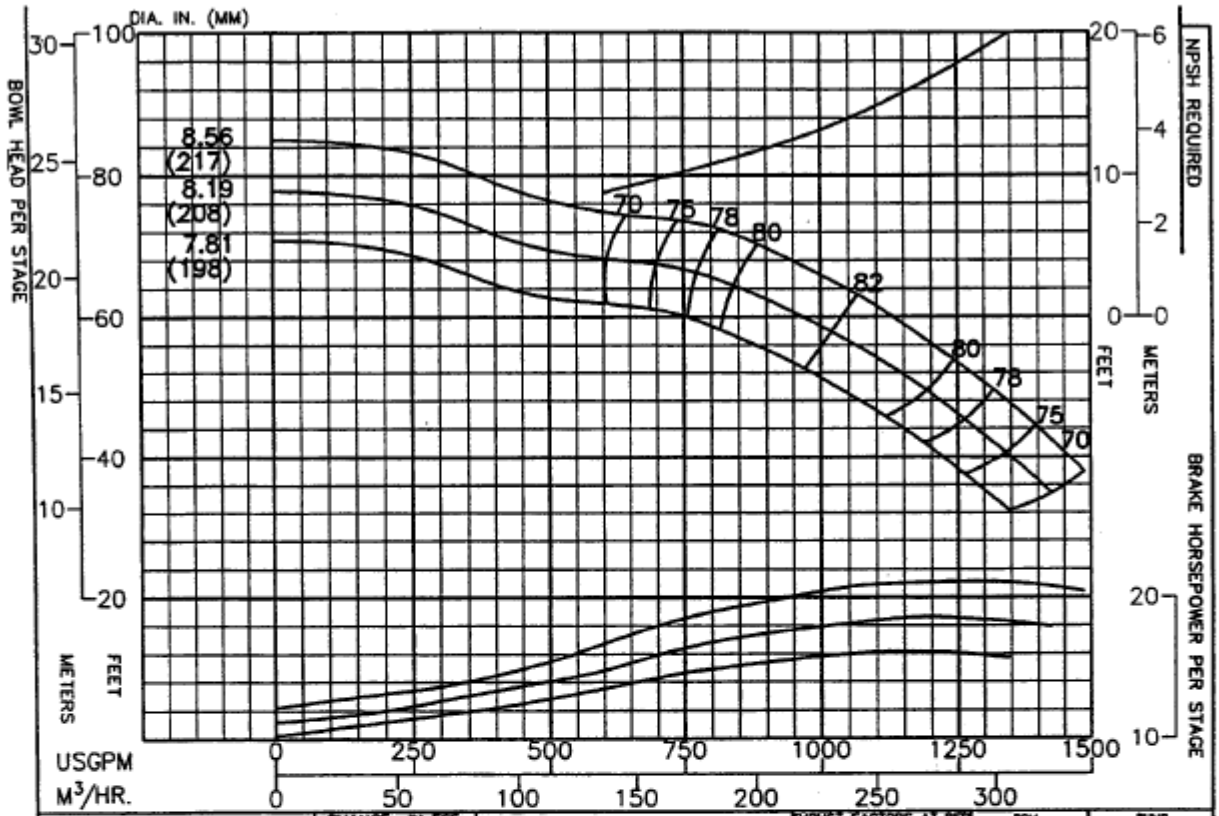

PERFORMANCE BASED ON PUMPING CLEAR WATER BELOW 85°F. WITH LISTED MATLS. COLUMN LOSSES NOT INCLUDED.	CHANGE IN EFF. STAGES	POINTS
	1	-2
	2	-1
BOWL – CAST IRON	3	0
IMPELLER – BRONZE		

THRUST FACTORS AT BEP			RPM	PUMP
IMPELLER	LBS/FT	KG/M	1770	12BH
STANDARD	15.0	22.4	SEMI-OPEN IMPELLER	CURVE NO.
BALANCED	----	----	N_s = 2580	EC–1890
EYE AREA–26.5 SQ. IN.				

Column	Nom. Size	Max. GPM	"A" Flanged	"B" Threaded
Optional				
Standard	8"	1500	11.44"	11.44"
Optional	10"	3000	13.50"	11.75"
RATINGS				
Max. Pressure = 300 psi based on Class 30 Iron bowls				
Impeller and Shaft Weight = 16.0 pounds per stage				
Pump Shaft	Diameter = 1.50 inches			
	Max. HP. = 200 with 416 SS Pump Shaft			
Line Shaft Size	1.00	1.25	1.50	
Line Shaft H.P.	57	115	200	

Additional Data	
Max. Operating Speed.	2100
Max. No. of Stages	17
Max. Sphere Size	.76
End Play	.56
WR 2 Per Stage	CF
Bowl Ring Clearance	N/A
Impeller Running Clearance (3)	.010 - .015

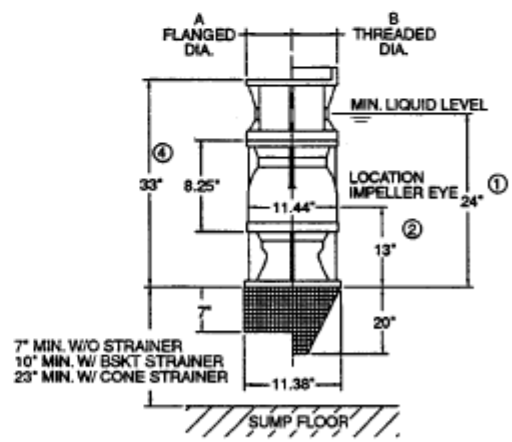

(1) Minimum submergence required to prevent vortex formation. The submergence needed to provide adequate NPSH to the first stage. Impeller may be greater or less than shown. The larger of the two values must be used to determine actual minimum allowable submergence.

CF–Contact Factory
N/A–Not Available

(2) Location of eye of first stage impeller. Used to calculate NPSH. This is also the minimum priming submergence. (See note 1).

(3) Vertical Impeller to Bowl running clearance after shaft stretch.

(4) For 10" Threaded Discharge Case dimensions see sheet 20.25.

All Specifications Subject to Change Without Notice.

FLOWSERVE