01-JUNE-2000
NEW SHEET

IMPELLER CURVES

14ENL/14NKL

FLOWSERVE

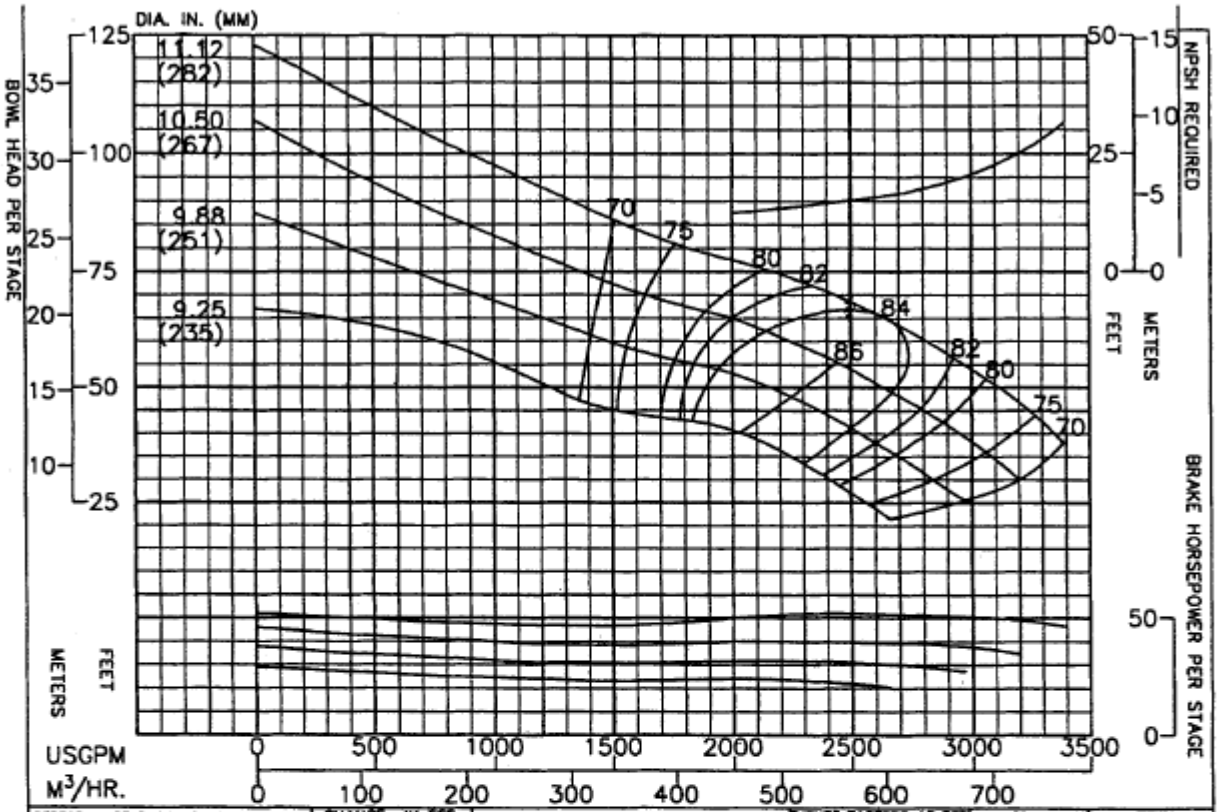

PERFORMANCE BASED ON PUMPING CLEAR WATER BELOW 85°F. WITH LISTED MATLS. COLUMN LOSSES NOT INCLUDED.	CHANGE STAGES	IN EFF. POINTS
BOWL – CAST IRON – LINED	1	-2
IMPELLER – BRONZE	2	-1
	3	0

THRUST FACTORS AT BEP			RPM	PUMP
IMPELLER	LBS./FT	KG/M	1775	14ENL
STANDARD	15.0	22.4	ENCLOSED IMPELLER	CURVE NO.
EYE AREA– 36.5 SQ. IN.			N_s = 4060	EC–2336

Column	Nom. Size	Max. GPM	"A" Flanged	"B" Threaded
Optional	8"	1500	11.50"	11.50"
Standard	10"	3000	13.50"	13.44"
Optional	12"	5000	16.00"	13.75"
RATINGS				
Max. Pressure = 508 psi based on Class 30 Iron bowls				
Impeller and Shaft Weight = 43.0 pounds per stage				
Pump Shaft	Diameter = 1.94 inches			
	Max. HP. = 440 with 416 SS Pump Shaft			
Line Shaft Size	1.25	1.50	1.69	1.94
Line Shaft H.P.	115	200	288	440

Additional Data	
Max. Operating Speed.	2100
Max. No. of Stages	9
Max. Sphere Size	1.72
End Play	.81
WR 2 Per Stage	2.90
Bowl Ring Clearance	.004 - .006
Impeller Running Clearance (3)	.125

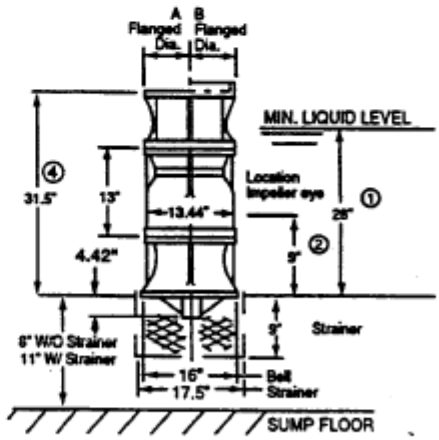

(1) Minimum submergence required to prevent vortex formation. The submergence needed to provide adequate NPSH to the first stage. Impeller may be greater or less than shown. The larger of the two values must be used to determine actual minimum allowable submergence.

(2) Location of eye of first stage impeller. Used to calculate NPSH. This is also the minimum priming submergence. (See note 1).

(3) Vertical Impeller to Bowl running clearance after shaft stretch.

(4) For Suction Case dimensions see sheets 20.26 and 20.29.

All Specifications Subject to Change Without Notice.