01-JUNE-2000
NEW SHEET

# IMPELLER CURVES

# 15EHL/15H226

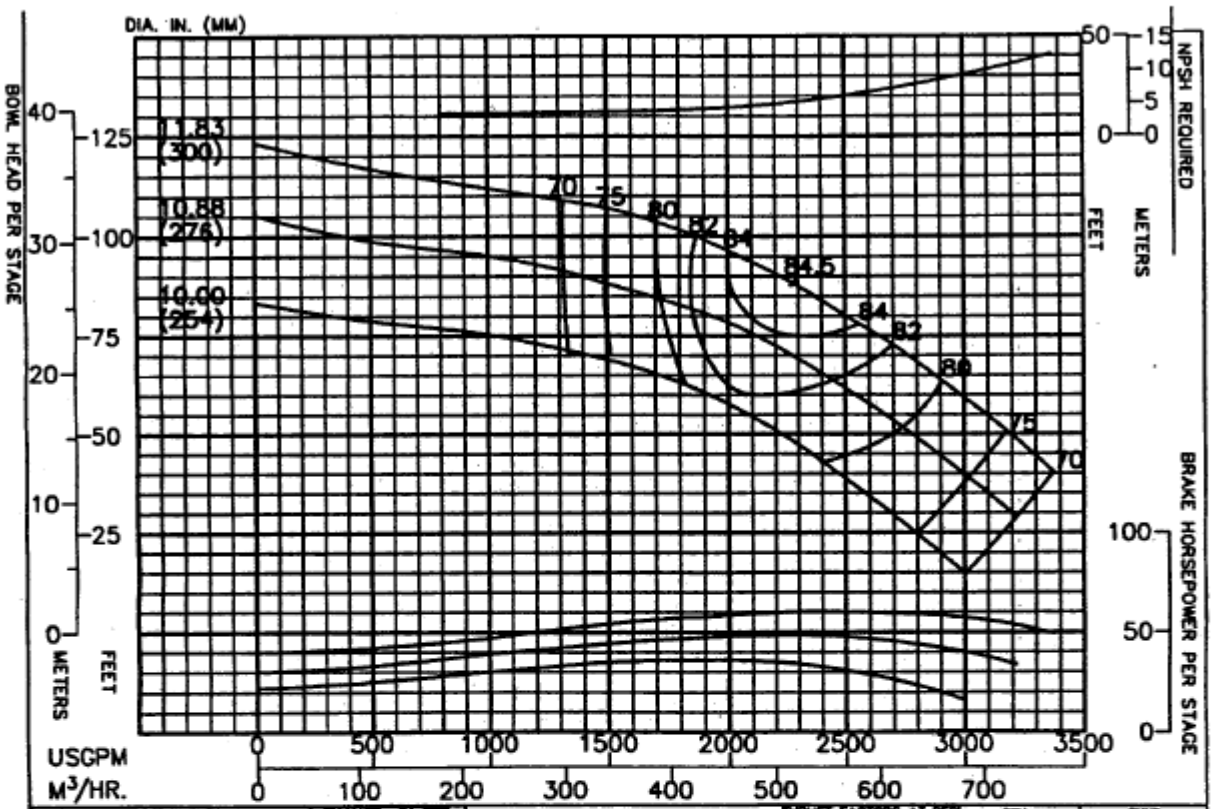


| PERFORMANCE BASED ON PUMPING CLEAR WATER BELOW BSF. WITH LISTED MATLS. COLUMN LOSSES NOT INCLUDED. | CHANGE IN DIF. STAGES | CHANGE IN DIF. POINTS |
|---|---|---|
| BOWL – CAST IRON – LINED | 1 | -3 |
| IMPELLER – BRONZE | 2 | -1.5 |
| | 3 | -1 |

| THRUST FACTORS AT BEP | | | RPM | PUMP |
|---|---|---|---|---|
| IMPELLER | LBS/FT | KG/M | 1775 | 15EHL |
| STANDARD | 12.5 | 18.6 | ENCLOSED IMPELLER | CURVE NO. |
| EYE AREA– 34.4 SQ. IN. | | | $N_s$ = 2930 | EC–2390 |

| Column | Nom. Size | Max. GPM | "A" Flanged | "B" Threaded |
|---|---|---|---|---|
| Optional | 10" | 3000 | 13.50" | 13.50" |
| Standard | 12" | 5000 | 16.00" | 14.50" |
| Optional | 14" | 7000 | – | 15.00" |
| RATINGS | | | | |
| Max. Pressure = 375 psi based on Class 30 Iron bowls | | | | |
| Impeller and Shaft Weight = 58.0 pounds per stage | | | | |
| Pump Shaft | Diameter = 2.19 inches | | | |
| | Max. HP. = 575 with 416 SS Pump Shaft | | | |
| Line Shaft Size | 1.50 | 1.69 | 1.94 | 2.19 |
| Line Shaft H.P. | 200 | 288 | 440 | 575 |

| Additional Data | |
|---|---|
| Max. Operating Speed. | 2100 |
| Max. No. of Stages | 9 |
| Max. Sphere Size | .38 |
| End Play | .75 |
| WR 2 Per Stage | 4.28 |
| Bowl Ring Clearance | .003 - .005 |
| Impeller Running Clearance (3) | .250 |

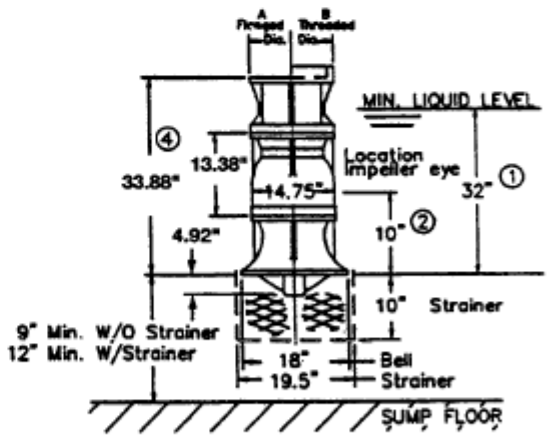


(1) Minimum submergence required to prevent vortex formation. The submergence needed to provide adequate NPSH to the first stage. Impeller may be greater or less than shown. The larger of the two values must be used to determine actual minimum allowable submergence.

(2) Location of eye of first stage impeller. Used to calculate NPSH. This is also the minimum priming submergence. (See note 1).

(3) Vertical Impeller to Bowl running clearance after shaft stretch.

(4) For Suction Case dimensions see sheets 20.26 and 20.29.

All Specifications Subject to Change Without Notice.