01-JUNE-2000
NEW SHEET

IMPELLER CURVES

16ENH/16NKH

FLOWSERVE

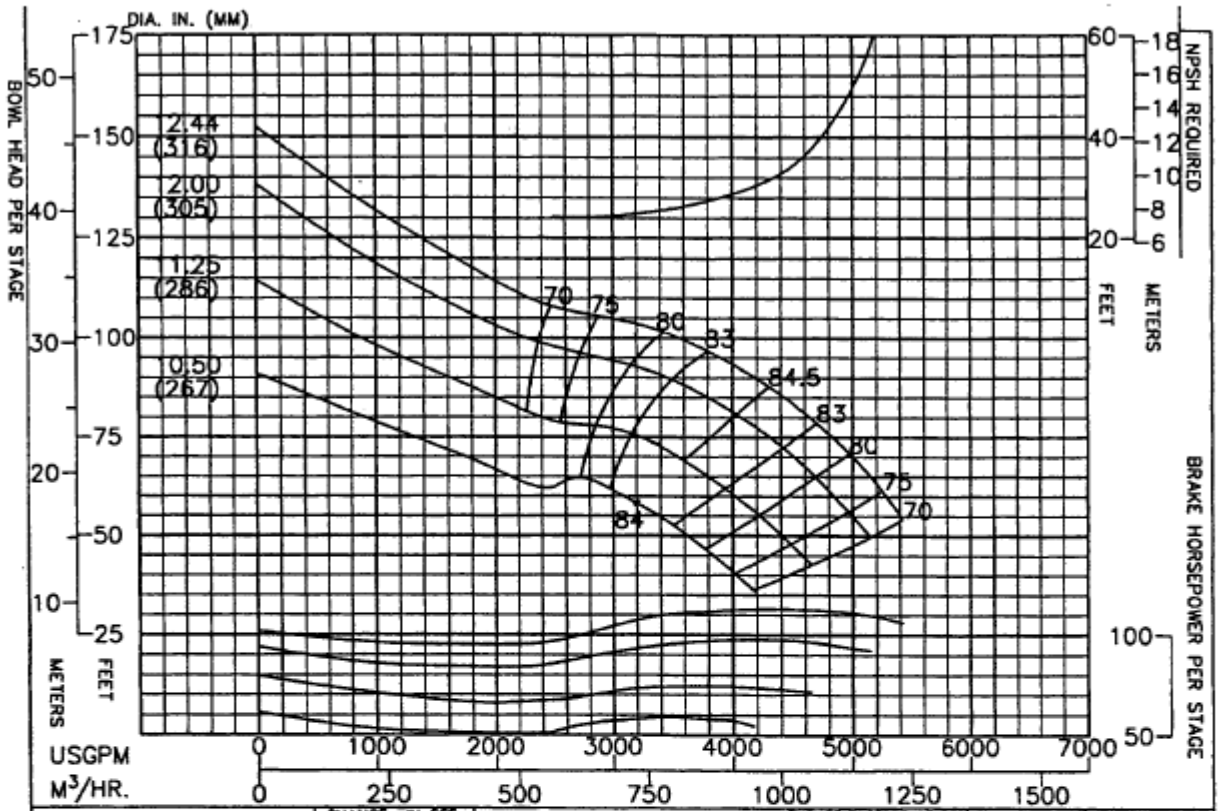

PERFORMANCE BASED ON PUMPING CLEAR WATER BELOW 85°F. WITH LISTED MATLS. COLUMN LOSSES NOT INCLUDED.	CHANGE IN EFF. STAGES	POINTS
	1	-2
	2	-1
BOWL – CAST IRON – LINED	3	0
IMPELLER – BRONZE		

THRUST FACTORS AT BEP		
IMPELLER	LBS/FT	KG/M
STANDARD	16.4	24.5
EYE AREA – 46.3 SQ. IN.		

RPM	PUMP
1775	16ENH
ENCLOSED IMPELLER	CURVE NO.
N_s = 4050	EC–1822

Column	Nom. Size	Max. GPM	"A" Flanged	"B" Threaded
Optional	10"	3000	13.50"	13.50"
Standard	12"	5000	16.00"	14.75"
Optional	14"	7000	–	15.00"
RATINGS				
Max. Pressure = 499 psi based on Class 30 Iron bowls				
Impeller and Shaft Weight = 61.2 pounds per stage				
Pump Shaft	Diameter = 2.19 inches			
	Max. HP. = 575 with 416 SS Pump Shaft			
Line Shaft Size	1.50	1.69	1.94	2.19
Line Shaft H.P.	200	288	440	575

Additional Data	
Max. Operating Speed.	2100
Max. No. of Stages	13
Max. Sphere Size	1.93
End Play	.94
WR 2 Per Stage	4.68
Bowl Ring Clearance	.003 - .005
Impeller Running Clearance (3)	.125

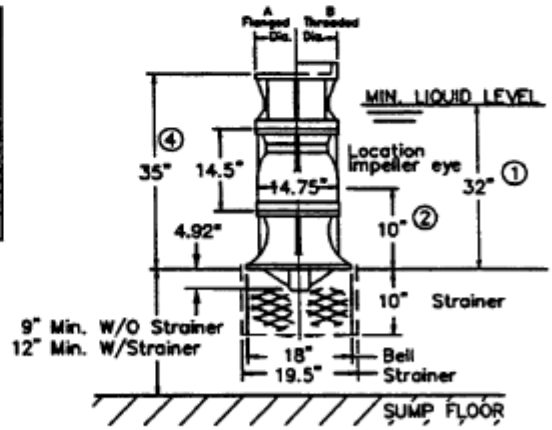

(1) Minimum submergence required to prevent vortex formation. The submergence needed to provide adequate NPSH to the first stage. Impeller may be greater or less than shown. The larger of the two values must be used to determine actual minimum allowable submergence.

(2) Location of eye of first stage impeller. Used to calculate NPSH. This is also the minimum priming submergence. (See note 1).

(3) Vertical Impeller to Bowl running clearance after shaft stretch.

(4) For Suction Case dimensions see sheets 20.26 and 20.29.

All Specifications Subject to Change Without Notice.