FLOWSERVE

8QKH Multiple Stage

01-JUNE-2000
NEW SHEET
IMPELLER CURVES

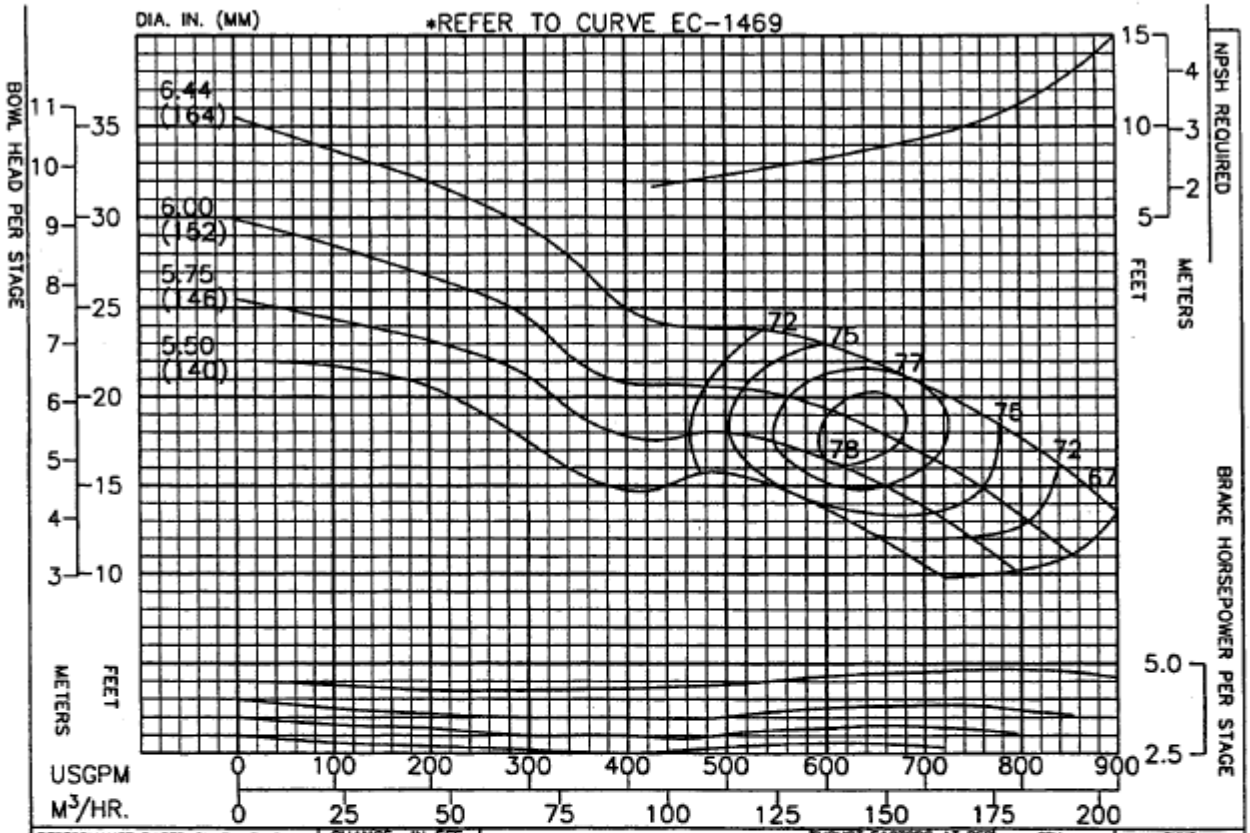

PERFORMANCE BASED ON PUMPING CLEAR WATER BELOW 85°F. WITH LISTED MATLS. COLUMN LOSSES NOT INCLUDED.	CHANGE STAGES	IN EFF. POINTS
	1	*
	2	−1
	3	0
BOWL – CAST IRON – LINED		
IMPELLER – BRONZE		

THRUST FACTORS AT BEP		
IMPELLER	LBS/FT	KG/M
STANDARD	6.6	9.8
ENCLOSED IMPELLER		
EYE AREA–16.0 SQ. IN.		

RPM 1770
N_s = 4710

PUMP 8QKH MULTIPLE STAGE
CURVE NO. EC–1468

Column	Nom. Size	Max. GPM	"A" Flanged	"B" Threaded
Optional				
Standard	6"	800	9.38"	7.63"
Optional				
RATINGS				
Max. Pressure = 640 psi based on Class 30 Iron bowls				
Impeller and Shaft Weight = 10.0 pounds per stage				
Pump Shaft	Diameter = 1.25 inches			
	Max. HP. = 115 with 416 SS Pump Shaft			
Line Shaft Size	1.00	1.25		
Line Shaft H.P.	57	115		

Additional Data	
Max. Operating Speed.	3600
Max. No. of Stages	24
Max. Sphere Size	1.05
End Play	.72
WR 2 Per Stage	.252
Bowl Ring Clearance	.004 - .006
Impeller Running Clearance (3)	0.125

(1) Minimum submergence required to prevent vortex formation. The submergence needed to provide adequate NPSH to the first stage. Impeller may be greater or less than shown. The larger of the two values must be used to determine actual minimum allowable submergence.

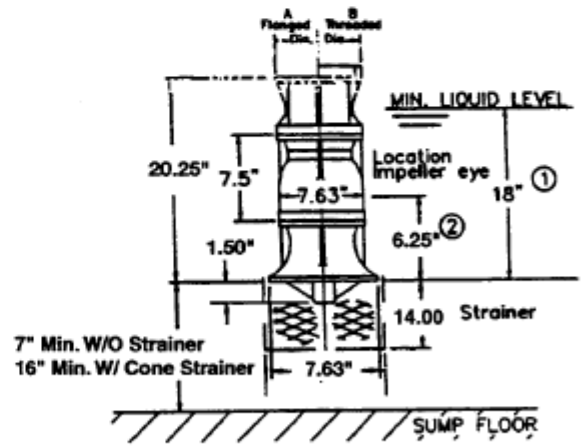

(2) Location of eye of first stage impeller. Used to calculate NPSH. This is also the minimum priming submergence. (See note 1).

(3) Vertical Impeller to Bowl running clearance after shaft stretch.

(4) Suction Bell NOT available on this model of pump.

01-JUNE-2000
NEW SHEET
IMPELLER CURVES

8QKH
Single Stage

FLOWSERVE

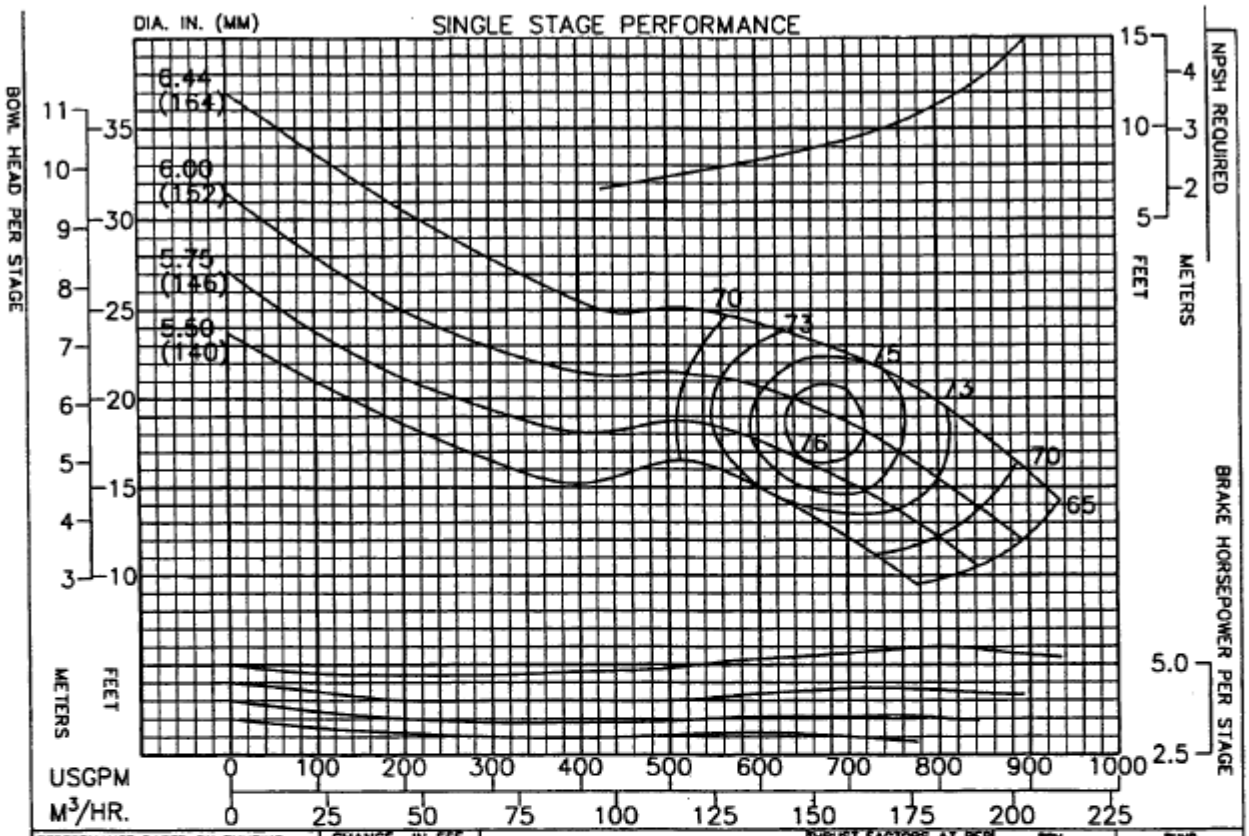

PERFORMANCE BASED ON PUMPING CLEAR WATER BELOW 85°F. WITH LISTED MATLS. COLUMN LOSSES NOT INCLUDED.	CHANGE STAGES	IN EFF. POINTS
	1	0
BOWL – CAST IRON – LINED		
IMPELLER – BRONZE		

THRUST FACTORS AT BEP		
IMPELLER	LBS/FT	KG/M
STANDARD	6.6	9.8
EYE AREA–16.0 SQ. IN.		

RPM	PUMP
1770	8QKH SINGLE STAGE
ENCLOSED IMPELLER	CURVE NO.
N_s = 4760	EC–1469

Column	Nom. Size	Max. GPM	"A" Flanged	"B" Threaded
Optional				
Standard	6"	600	9.38"	7.63"
Optional				
RATINGS				
Max. Pressure = 640 psi based on Class 30 Iron bowls				
Impeller and Shaft Weight = 10.0 pounds per stage				
Pump Shaft	Diameter = 1.25 inches			
	Max. HP. = 115 with 416 SS Pump Shaft			
Line Shaft Size	1.00	1.25		
Line Shaft H.P.	57	115		

Additional Data	
Max. Operating Speed.	3600
Max. No. of Stages	24
Max. Sphere Size	1.05
End Play	.72
WR 2 Per Stage	.252
Bowl Ring Clearance	.004 - .006
Impeller Running Clearance (3)	0.125

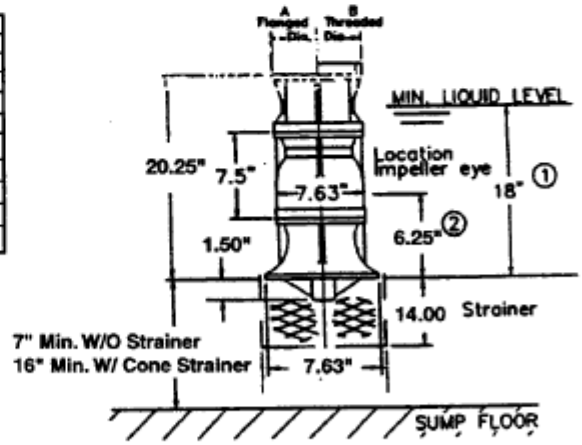

(1) Minimum submergence required to prevent vortex formation. The submergence needed to provide adequate NPSH to the first stage. Impeller may be greater or less than shown. The larger of the two values must be used to determine actual minimum allowable submergence.

(2) Location of eye of first stage impeller. Used to calculate NPSH. This is also the minimum priming submergence. (See note 1).

(3) Vertical Impeller to Bowl running clearance after shaft stretch.

(4) Suction Bell NOT available on this model of pump.

All Specifications Subject to Change Without Notice.