10EMM/10M50

IMPELLER CURVES

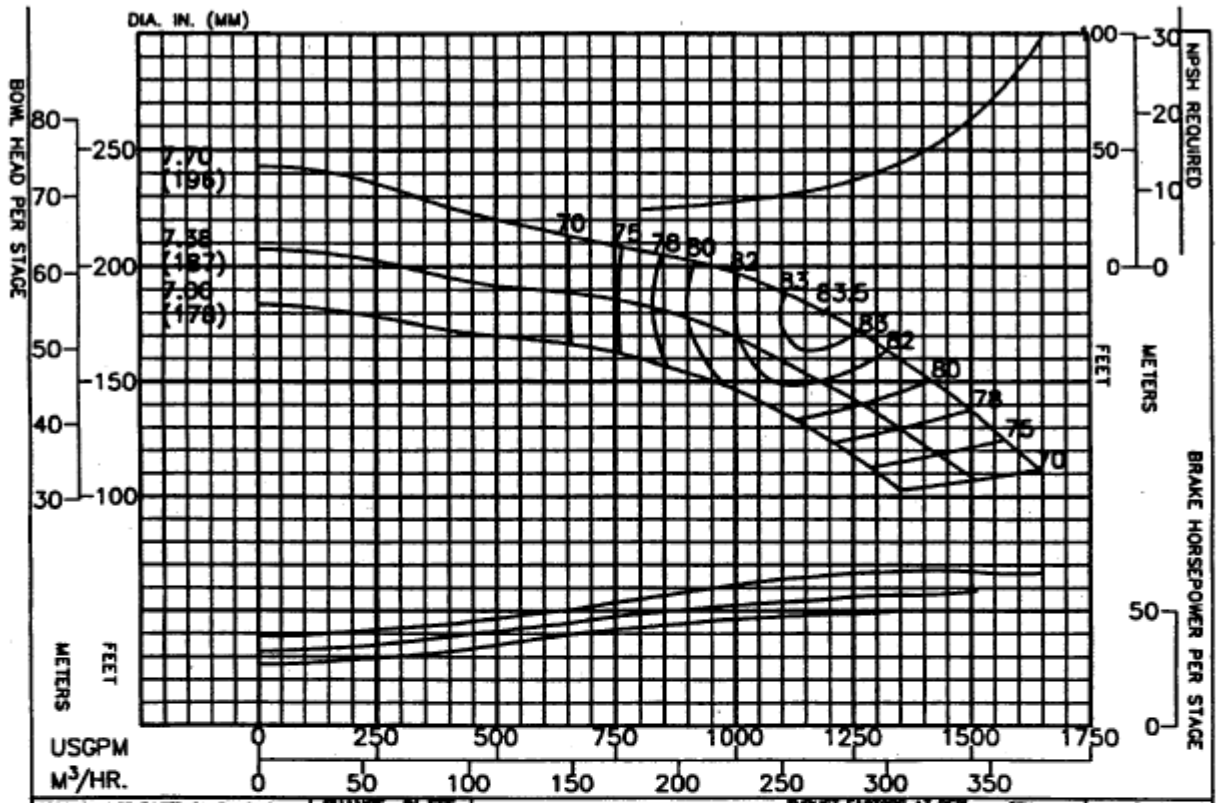

PERFORMANCE BASED ON PUMPING CLEAR WATER BELOW 85°F. WITH LISTED MAT'LS. COLUMN LOSSES NOT INCLUDED.	CHANGE STAGES	IN FOT. POINTS	THRUST FACTORS AT BEP: IMPELLER LBS/FT KG/M	RPM 3550	PUMP 10EMM
BOWL - CAST IRON - LINED	2	-1.5	STANDARD 3.94 5.87	ENCLOSED IMPELLER	CURVE NO.
IMPELLER - BRONZE	3	-1	EYE AREA- 11.2 SQ. IN.	N_s = 2480	EC-2369

Column	Nom. Size	Max. GPM	"A" Flanged	"B" Threaded
Optional				
Standard	6"	600	9.50"	9.50"
Optional	8"	1500	11.38"	9.63"
RATINGS				
Max. Pressure = 472 psi based on Class 30 Iron bowls				
Impeller and Shaft Weight = 15.5 pounds per stage				
Pump Shaft	Diameter = 1.50 inches			
	Max. HP. = 395 with 416 SS Pump Shaft			
Line Shaft Size	1.00	1.25	1.50	
Line Shaft H.P.	114	227	395	

Additional Data	
Max. Operating Speed.	3600
Max. No. of Stages	20
Max. Sphere Size	.25
End Play	.50
WR 2 Per Stage	.47
Bowl Ring Clearance	.004 - .006
Impeller Running Clearance (3)	0.125

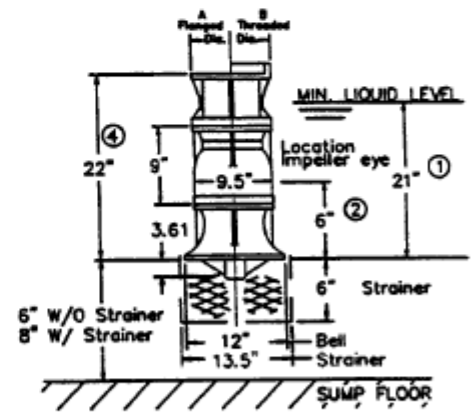

(1) Minimum submergence required to prevent vortex formation. The submergence needed to provide adequate NPSH to the first stage. Impeller may be greater or less than shown. The larger of the two values must be used to determine actual minimum allowable submergence.

(2) Location of eye of first stage impeller. Used to calculate NPSH. This is also the minimum priming submergence. (See note 1).

(3) Vertical Impeller to Bowl running clearance after shaft stretch.

(4) For Suction Case dimensions see sheets 20.25 and 20.27.