01-JUNE-2000
NEW SHEET

IMPELLER CURVES

6H18

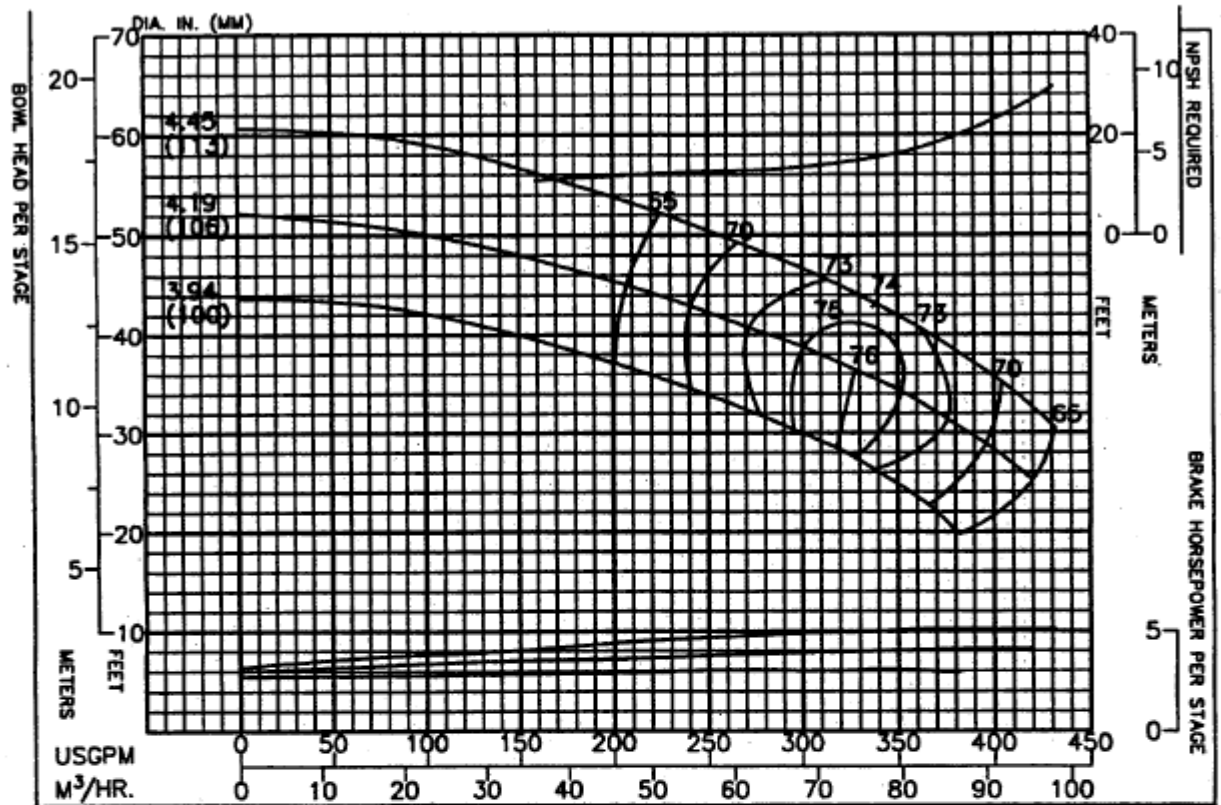

PERFORMANCE BASED ON PUMPING CLEAR WATER BELOW BST. WITH LISTED MATLS. COLUMN LOSSES NOT INCLUDED.	CHANGE STAGES	IN EFF. POINTS
	1	-2.5
BOWL – CAST IRON	2	-1
IMPELLER – BRONZE	3	-.5

THRUST FACTORS AT BEP			RPM	PUMP
IMPELLER	LBS/FT	KG/M	3500	6H18
STANDARD	2.31	3.44	ENCLOSED IMPELLER	CURVE NO.
EYE AREA– 6.28 SQ. IN.			N_s = 3840	EC–2381

Column	Nom. Size	Max. GPM	"A" Flanged	"B" Threaded
Optional				
Standard	4"	200	7.50"	5.63"
Optional	5"	400	9.50"	6.25"
RATINGS				
Max. Pressure = 640 psi based on Class 30 Iron bowls				
Impeller and Shaft Weight = 5.0 pounds per stage				
Pump Shaft	Diameter = 1.00 inches			
	Max. HP. = 114 with 416 SS Pump Shaft			
Line Shaft Size	1.00			
Line Shaft H.P.	114			

Additional Data	
Max. Operating Speed.	3600
Max. No. of Stages	20
Max. Sphere Size	.13
End Play	.31
WR 2 Per Stage	.048
Clearance	.003 - .005
Impeller Running Clearance (3)	0.125

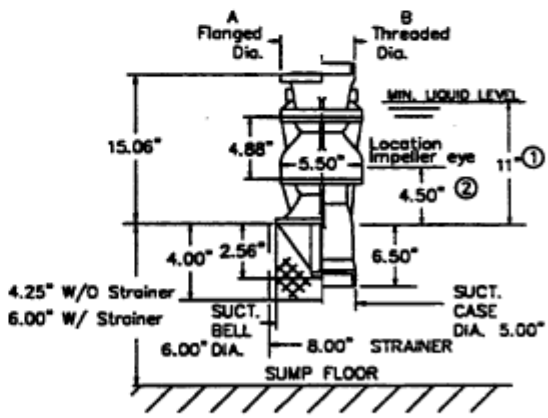

(1) Minimum submergence required to prevent vortex formation. The submergence needed to provide adequate NPSH to the first stage. Impeller may be greater or less than shown. The larger of the two values must be used to determine actual minimum allowable submergence.

(2) Location of eye of first stage impeller. Used to calculate NPSH. This is also the minimum priming submergence. (See note 1).

(3) Vertical Impeller to Bowl running clearance after shaft stretch.